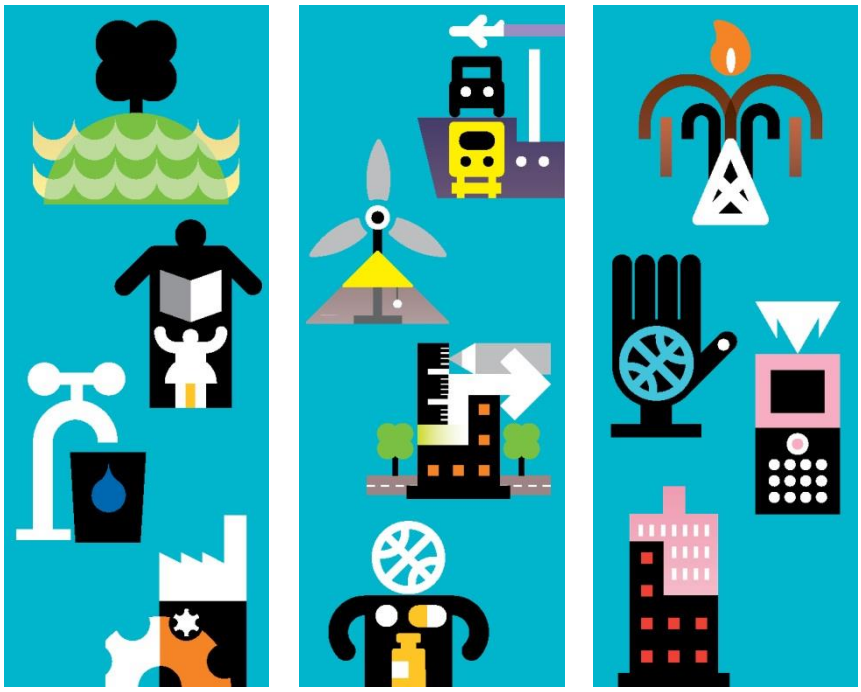

Lenham, Maidstone

Addendum to Technical Note: Junction capacity assessment results

August 2015

Maidstone Borough Council

Mott MacDonald

Lenham, Maidstone

Addendum to Technical Note: Junction capacity assessment results

August 2015

Maidstone Borough Council

Maidstone House
King Street
Maidstone
Kent
ME15 6JQ

Mott MacDonald, Stoneham Place, Stoneham Lane, Southampton, SO50 9NW, United Kingdom
T +44 (0)23 8062 8800 **F** +44 (0)23 8064 7251 **W** www.mottmac.com

Issue and revision record

Revision	Date	Originator	Checker	Approver	Description
A	July 2015	S Almond	M Olley	M Olley	First Issue
B	August 2015	S Almond	R Khakh	M Olley	Second Issue

Information class: Standard

This document is issued for the party which commissioned it and for specific purposes connected with the above-captioned project only. It should not be relied upon by any other party or used for any other purpose.

We accept no responsibility for the consequences of this document being relied upon by any other party, or being used for any other purpose, or containing any error or omission which is due to an error or omission in data supplied to us by other parties.

This document contains confidential information and proprietary intellectual property. It should not be shown to other parties without consent from us and from the party which commissioned it.

Contents

Chapter	Title	Page
1	Introduction	1
2	Junction Capacity Assessments	2
2.1	Pilgrim's Way / Ashford Road (A20) / Ham Lane / Ashford Road (A20)	2
2.2	Ashford Road (A20) / Maidstone Road / Ashford Road (A20)	2
2.3	Ham Lane / Old Ham Lane	3
2.4	Faversham Road / Old Ashford Road / High Street / Maidstone Road	3
2.5	Ashford Road (A20) / Old Ashford Road	4
2.6	Faversham Road / Ashford Road (A20)	4
2.7	Modelling summary	5
2.8	Safety	5
2.9	Mitigation	6
3	Summary	7
Appendices		8
Appendix A.	Development distribution	9
A.1	AM peak distribution	9
A.2	PM peak distribution	9
Appendix B.	Modelling results for Design 2031	10

1 Introduction

Technical Note 334395-TPN-ITD-003 summarises the junction capacity assessment results for six junctions across the village of Lenham, Maidstone. The development sites, supplied by Maidstone Borough Council (MBC), are schemes which:

- Have been through the MBC planning system;
- Have planning applications pending;
- Are allocated development sites; and
- Are aspirational development sites for the immediate future

The Technical Note sets out the methodology adopted in order to estimate likely junction demand. Results for Existing 2015, Base 2031 and Design 2031 have been summarised. Base 2031 is predicted future background traffic without development, and Design 2031 is predicted future background traffic with development. The junction capacity analysis shows all junctions would operate within recommended maximum design threshold in Base 2031 and Design 2031.

There is one scheme which was omitted from the junction capacity assessments. This one site has been 'earmarked' under Policy H1 (3) of the Regulation 18 Consultation version of the MBC Local Plan 2014 as a *"broad location for the development of up to 1500 dwellings in the period after 2026"* (description as per MBC, taken from the Lenham Allocated site document). The scheme is to be reviewed in 2021 when the Local Plan would be subject to a mid-life review. MBC confirmed that *"early indications are that land could be available to the west of Ham Lane/Old Ham Lane and to the south of Old Ashford Road split roughly 50-50 between E and W of the village"* (description as per MBC, taken from the Lenham Allocated site document).

With this scheme not as advanced as the other sites (as listed in Appendix A of Technical Note 334395-TPN-ITD-003), in terms of likelihood of being built, this Addendum has been produced to accompany the main Technical Note. The Base 2031 scenarios for all six junctions operate within capacity so will not be re-run. This Addendum summarises the capacity assessment results with all sites included in the modelling of Design 2031, i.e. predicted future background traffic plus all development. This can then be used as a comparator against the main Technical Note in terms of feasibility of the 1,500 dwellings in Lenham.

Following this introduction, the remainder of the Addendum sets out:

- Summary of junction capacity results for Design 2031;
- Mitigation measures; and
- Summary

Appendix A contains the distribution of all listed development sites Lenham for weekday AM and PM peak hours.

2 Junction Capacity Assessments

2.1 Pilgrim's Way / Ashford Road (A20) / Ham Lane / Ashford Road (A20)

Table 2.1 summarises the modelling results for the worst performing time segments within the peak hour, i.e. the peak within the peak.

Table 2.1: Pilgrim's Way / Ashford Road (A20) / Ham Lane / Ashford Road (A20) – Design 2031

	AM			PM		
	Queue (PCUs)	Delay (s)	RFC	Queue (PCUs)	Delay (s)	RFC
Ham Lane (S) – Ashford Road (W) and Pilgrim's Way (N)	434	-	-	-	-	-
Ham Lane (S) – Ashford Road (E) and Pilgrim's Way (N)	145	-	-	104	-	-
Ashford Road (E) – Ham Lane (S), Ashford Road (W) and Pilgrim's Way (N)	0	0	0	0	27	0.01
Pilgrim's Way (N) – Ashford Road (E), Ham Lane (S) and Ashford Road (W)	10	-	-	6	-	-
Ashford Road (W) – Ashford Road (E), Ham Lane (S) and Pilgrim's Way (N)	12	57	0.94	114	645	1.15

- The modelling predicts that the junction would exceed capacity in Design 2031. Four of the five movements would experience severe delays and congestion, with the junction saturated.

2.2 Ashford Road (A20) / Maidstone Road / Ashford Road (A20)

Table 2.2 summarises the modelling results for the worst performing time segments within the peak hour, i.e. the peak within the peak.

Table 2.2: Ashford Road (A20) / Maidstone Road / Ashford Road (A20) – Design 2031

	AM			PM		
	Queue (PCUs)	Delay (s)	RFC	Queue (PCUs)	Delay (s)	RFC
Maidstone Road (S) – Ashford Road (E) and Ashford Road (W)	4	38	0.80	1	12	0.45
Ashford Road (W) – Ashford Road (E) and Maidstone Road (S)	1	16	0.42	2	23	0.68

- The modelling predicts that the junction would operate within design threshold (RFC 0.85 or below). The maximum RFC in the AM peak is modelled as 0.80 with a queue of four and delay of 38 seconds. This is on Maidstone Road turning onto Ashford Road. The reverse movements have the greatest level of demand in PM peak, with a RFC of 0.68, a queue of two PCUs, and a delay of 23 seconds.

2.3 Ham Lane / Old Ham Lane

Table 2.3 summarises the modelling results for the worst performing time segments within the peak hour, i.e. the peak within the peak.

Table 2.3: Ham Lane / Old Ham Lane – Design 2031

	AM			PM		
	Queue (PCUs)	Delay (s)	RFC	Queue (PCUs)	Delay (s)	RFC
Old Ham Lane – Ham Lane (N)	0	6	0.02	0	7	0.2
Old Ham Lane – Ham Lane (S)	0	9	0.02	0	10	0.01
Ham Lane (N) – Ham Lane (S) and Old Ham Lane	0	5	0.01	0	5	0.04

- The modelling predicts that the junction would operate within capacity in Design 2031, no queuing and minimal delay. The maximum RFC in the AM peak is modelled as 0.02 with no queuing, and a delay of nine seconds. In the PM peak, the highest RFC is 0.04, no queuing, and a delay of ten seconds.

2.4 Faversham Road / Old Ashford Road / High Street / Maidstone Road

Table 2.4 summarises the modelling results for the worst performing time segments within the peak hour, i.e. the peak within the peak.

Table 2.4: Faversham Road / Old Ashford Road / High Street / Maidstone Road – Design 2031

	AM			PM		
	Queue (PCUs)	Delay (s)	RFC	Queue (PCUs)	Delay (s)	RFC
Old Ashford Road (E) – Faversham Road (N), High Street (S) and Maidstone Road (W)	427	-	2.04	127	-	1.49
Faversham Road (N) – Old Ashford Road (E), High Street (S) and Maidstone Road (W)	0	6	0.02	0	6	0.05
Maidstone Road (W) – Faversham Road (N) and Old Ashford Road (E)	72	-	-	2	40	0.69
Maidstone Road (W) – Old Ashford Road (E) and High Street (S)	22	-	-	2	57	0.72
High Street (S) – Faversham Road (N), Old Ashford Road (E) and Maidstone Road (W)	1	12	0.53	4	24	0.77

- The modelling predicts that the junction would exceed capacity in Design 2031, with queuing and delay. The maximum RFC in the AM peak is modelled as 2.04 with significant queuing and delay. In the PM peak, the highest RFC is 1.49, 127 PCUs queuing, and severe delay. The results show that Maidstone Road W would experience high delays of 57 seconds, which the modelling outputs classify as the junction failing. The modelling shows that for Design 2031, the junction would be saturated.

2.5 Ashford Road (A20) / Old Ashford Road

Table 2.5 summarises the modelling results for the worst performing time segments within the peak hour, i.e. the peak within the peak.

Table 2.5: Ashford Road (A20) / Old Ashford Road – Design 2031

	AM			PM		
	Queue (PCUs)	Delay (s)	RFC	Queue (PCUs)	Delay (s)	RFC
Old Ashford Road (S) – Ashford road (E) and Ashford Road (W)	**28**	**360**	**1.21**	10	**133**	0.97
Ashford Road (W) – Ashford Road (E) and Old Ashford Road (S)	0	4	0.01	0	4	0.01

- The modelling predicts that the junction would exceed capacity in the Design 2031 AM peak. The maximum RFC in the AM peak is modelled as 1.21, which exceeds the design threshold of RFC 1.00. This shows that the junction would operate over 100% capacity, i.e. saturated. The AM peak results also show 28 PCUs queuing and a delay of 360 seconds. In the PM peak, the highest RFC is 0.97, with 10 PCUs queuing, and a delay of 133 seconds. Although the PM shows the junction would operate within design threshold, it has exceeded desirable threshold (RFC 0.85) and the delay at the junction on this movement is highlighted as a warning that the junction is over capacity. The junction would become saturated in Design 2031.

2.6 Faversham Road / Ashford Road (A20)

Table 2.6 summarises the modelling results for the worst performing time segments within the peak hour, i.e. the peak within the peak.

Table 2.6: Faversham Road / Ashford Road (A20) Design 2031

	AM			PM		
	Queue (PCUs)	Delay (s)	RFC	Queue (PCUs)	Delay (s)	RFC
Faversham Road (S) – Ashford Road West and Faversham Road (N)	2	29	0.65	1	22	0.50
Faversham Road (S) – Ashford Road East and Faversham Road (N)	1	**63**	0.56	1	39	0.45
Ashford Road East – Faversham Road (S), Ashford Road West and Faversham Road (N)	0	9	0.08	0	11	0.13
Faversham Road (N) – Ashford Road East and Faversham Road (S)	2	**66**	0.70	0	15	0.15
Faversham Road (N) – Faversham Road (S) and Ashford Road West	3	**128**	0.79	1	42	0.32
Ashford Road West – Ashford Road East, Faversham Road (S) and Faversham Road (N)	0	10	0.16	1	10	0.32

- The modelling predicts that the junction would operate within capacity in Design 2031, but it would experience significant time delay (in seconds). The maximum RFC in the AM peak is modelled as 0.79 with three PCUs queuing, and a delay of 128 seconds. In the PM peak, the highest RFC is 0.50, with one PCU queuing, and a delay of 42 seconds. Although the results show that the junction would operate within desirable capacity, delays experienced on Faversham Road, in both directions, would deem the junction as saturated.

Appendix B contains the modelling outputs for Design 2031 accounting for all listed development sites, as supplied by MBC. The Existing 2015 and Base 2031 modelling outputs are in the Technical Note 344395-TPN-ITD-003. The traffic flows and subsequent modelling for these scenarios will not change. The additional 1,500 residential scheme will only affect the Design 2031, which is predicted background traffic plus any developments.

2.7 Modelling summary

In summation, the modelling for Design 2031 shows that four of the six junctions would exceed design capacity or experience significant delay (in seconds) during the morning and evening peaks. The four junctions are:

1. Pilgrim's Way / Ashford Road (A20) / Ham Lane / Ashford Road (A20)
2. Faversham Road / Old Ashford Road / High Street / Maidstone Road
3. Ashford Road (A20) / Old Ashford Road
4. Faversham Road / Ashford Road (A20)

The modelling is based on, and sensitive to the various inputs. These inputs are:

- Peak hour survey data for each junction;
- Development sites and associated development traffic;
- Distribution of development across the road network; and
- Junction layout

The developments to be accounted for, and associated traffic distribution was supplied and agreed by MBC. If there is an increase in allocated development, or decrease in allocated development, the modelling and subsequent capacity assessment will need amending to reflect the change in development trips across the network.

2.8 Safety

As stated in the main Technical Note (334125-TPN-ITD-003), the modelling work for Lenham has been concerned with how the predicted growth in background traffic to 2031, plus the application of development traffic associated with the schemes stated by MBC, would affect junction capacity, i.e. would the junction operate within what the industry considers acceptable. Safety has not been a focus of this review.

2.9 Mitigation

Four of the junctions which were modelled are predicted to exceed design capacity, i.e. the junctions would operate over 100% (i.e. a ratio to flow capacity, RFC, of 1.0) or experience significant delays. This can be attributed to the total of 1,500 dwelling development, as without this larger residential scheme, the junction modelling results were showing all junctions within capacity.

Mitigation measures to improve the junctions will depend on land availability, cost and safety. In order to accommodate the Design 2031 traffic flows, the four junctions would need to be modified. This may involve extensive works, for example changing to a signalised junction or roundabout, which would have implications in terms of land acquisition, cost and disturbance to the communities living in the village.

The larger scheme is earmarked and subject to review in 2021. In order to support this review, it is recommended that MBC carry out further background studies into the feasibility of this larger scheme, termed 'Lenham in the broad location'. This should include the following:

- Researching possibilities of reducing the size of the scheme;
- Researching the feasibility of splitting the scheme into smaller plots across the Borough of Maidstone;
- Carrying out reviews of land availability for possible widening and extending of roads and junctions, including change in layout from priority to signal junctions or roundabouts at the six junctions, i.e. suitability and feasibility of land acquisition and purchase;
- Carrying out reviews of safety, and whether the additional traffic associated with the larger scheme in Lenham would have implications (positive and / or negative) in terms of road safety and non-motorised user safety if junctions are upgraded and modified; and
- Carrying out reviews of sustainable transport and smarter travel initiatives, and whether alternatives such as improved public transport links to key transport interchanges could reduce the number of trips generated by the development.

3 Summary

In summary:

- This is an Addendum to the main Lenham Technical Note 334395-TPN-ITD-003;
- Six junctions, as stated by MBC, have been modelled for all likely development up to 2031, including the site earmarked for 1,500 residential properties under Policy H1 (3) of the Regulation 18 Consultation version of the MBC Local Plan 2014. This site is not likely to go ahead until post 2026, and not undergo any planning process before the Local Plan has undergone it's mid-life review in 2021;
- Traffic information was supplied by MBC by way of Transport Assessments. The Transport Assessments were reviewed, and where possible, information was used to estimate traffic distribution. In the absence of information, assumptions were made based on the key destinations and trip attractors
- The distribution for the likely schemes was reviewed as part of the main Technical Note. The distribution for the larger 1,500 scheme is the same as for the other schemes, which MBC agreed with;
- Without the larger 1,500 residential scheme, the six junctions would operate within capacity in Design 2031;
- With the inclusion of the larger 1,500 residential scheme, four junctions would exceed capacity in Design 2031 leading to significant queuing and delays;
- Mitigation measures for the junctions are dependent on further studies.

Appendices

Appendix A. Development distribution 9
Appendix B. Modelling results for Design 2031 10

Appendix A. Development distribution

A.1 AM peak distribution

A.2 PM peak distribution

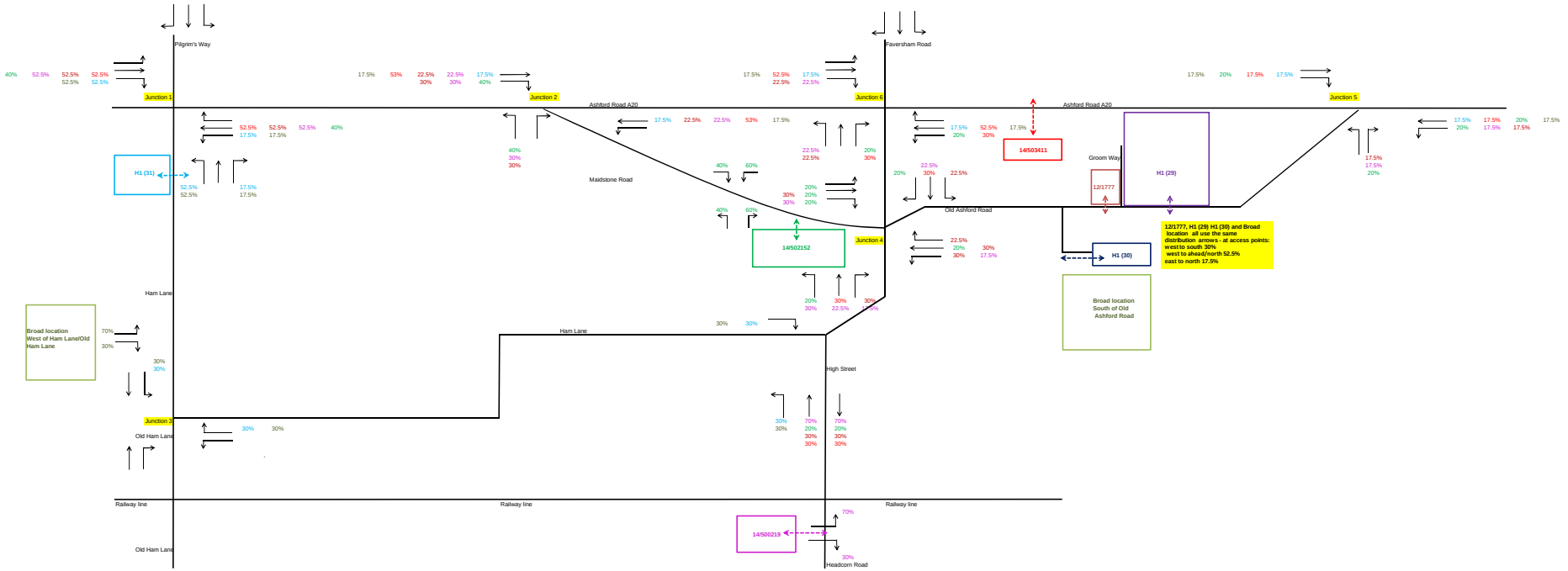
Pilgrim's Way
Faversham Road
Junction 1
Junction 2
Junction 6
Junction 5
Ashford Road A20
Ashford Road A20
H1 (31)
Maidstone Road
14/503411
Groom Way
H1 (29)
12/1777
Old Ashford Road
14/502152
Junction 4
H1 (30)
12/1777, H1 (29) H1 (30) and Broad location all use the same distribution arrows - at access points: west to south 30% west to ahead/north 52.5% east to north 17.5%
Broad location South of Old Ashford Road
Ham Lane
Broad location West of Ham Lane/Old Ham Lane
Ham Lane
High Street
Junction 3
Old Ham Lane
Railway line
Railway line
Railway line
14/500219
Old Ham Lane
Headcorn Road

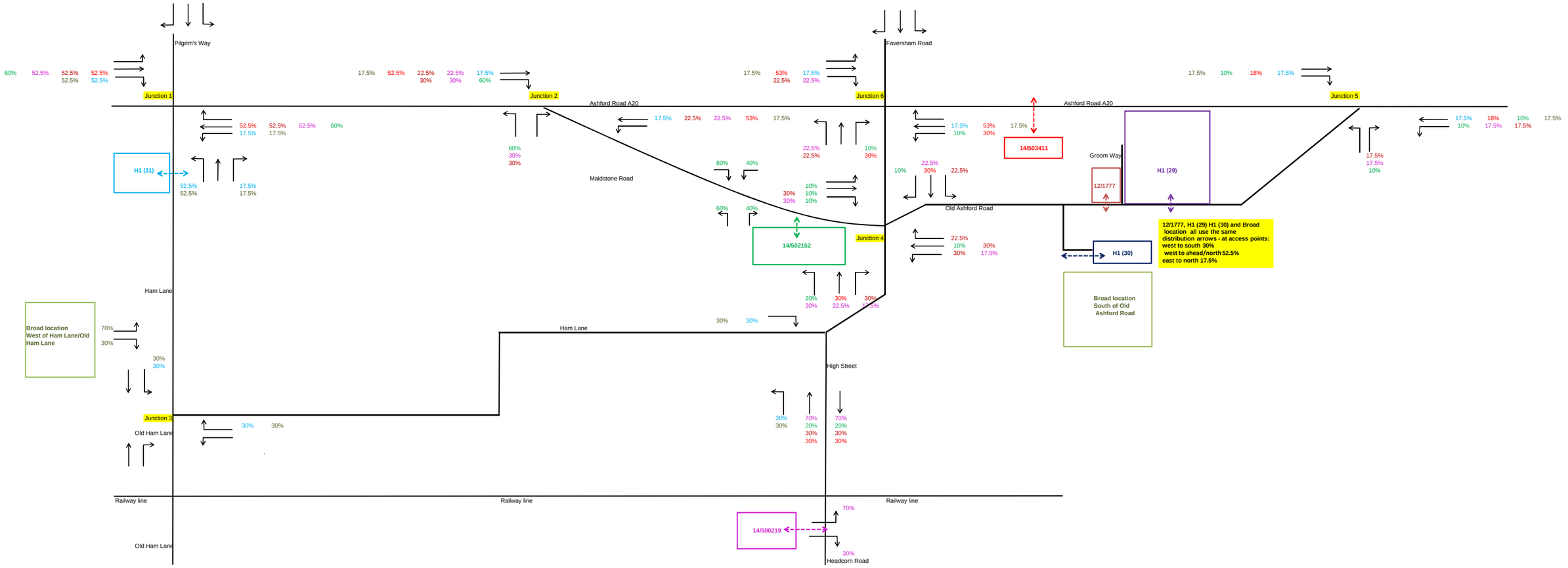
Pilgrim's Way
Faversham Road
Junction 1
Junction 2
Junction 6
Junction 5
Junction 4
Junction 3
Ashford Road A20
Ashford Road A20
Maidstone Road
Old Ashford Road
Groom Way
Ham Lane
Ham Lane
High Street
Old Ham Lane
Old Ham Lane
Railway line
Railway line
Railway line
Headcorn Road
H1 (31)
H1 (29)
H1 (30)
12/1777
14/503411
14/502152
14/500219
Broad location West of Ham Lane/Old Ham Lane
Broad location South of Old Ashford Road
12/1777, H1 (29) H1 (30) and Broad location all use the same distribution arrows - at access points:
west to south 30%
west to ahead/north 52.5%
east to north 17.5%

Appendix B. Modelling results for Design 2031

Junctions 9

PICADY 9 - Priority Intersection Module

Version: 9.0.0.4211 []
© Copyright TRL Limited, 2015

For sales and distribution information, program advice and maintenance, contact TRL:
Tel: +44 (0)1344 770758 email: software@trl.co.uk Web: http://www.trlsoftware.co.uk

The users of this computer program for the solution of an engineering problem are in no way relieved of their responsibility for the correctness of the solution

Filename: J1 Ashford Road Ham Lane Pilgrims Way.j9
Path: P:\Southampton\ITW\Projects\347826 - Maidstone BC Jct Assessment\AD. Lenham\PICADY models for Addendum\J1 Ashford Road Ham Lane Pilgrims Way
Report generation date: 06/08/2015 08:53:00

»J1 Ashford Road/Ham Lane/Pilgrims Way - Base 2031 + Dev, AM
»J1 Ashford Road/Ham Lane/Pilgrims Way - Base 2031 + Dev, PM

Summary of junction performance

	AM				PM			
	Queue (PCU)	Delay (s)	RFC	LOS	Queue (PCU)	Delay (s)	RFC	LOS
	J1 Ashford Road/Ham Lane/Pilgrims Way - Base 2031 + Dev							
Stream B-CD	433.9	5574.45	9999999999.00	F	326.7	9999999999.00	9999999999.00	F
Stream B-AD	144.9	5621.10	9999999999.00	F	104.4	9999999999.00	9999999999.00	F
Stream A-BCD	0.0	0.00	0.00	A	0.0	27.41	0.01	D
Stream A-B								
Stream A-C								
Stream D-ABC	9.5	9999999999.00	9999999999.00	F	6.0	9999999999.00	9999999999.00	F
Stream C-ABD	11.6	56.68	0.94	F	114.4	644.59	1.15	F
Stream C-D								
Stream C-A								

Values shown are the highest values encountered over all time segments. Delay is the maximum value of average delay per arriving vehicle.

File summary

File Description

Title	(untitled)
Location	
Site number	
Date	30/06/2015
Version	
Status	(new file)
Identifier	
Client	
Jobnumber	
Enumerator	MOTTMAC"rap67683
Description	

Units

Distance units	Speed units	Traffic units input	Traffic units results	Flow units	Average delay units	Total delay units	Rate of delay units
m	kph	PCU	PCU	perHour	s	-Min	perMin

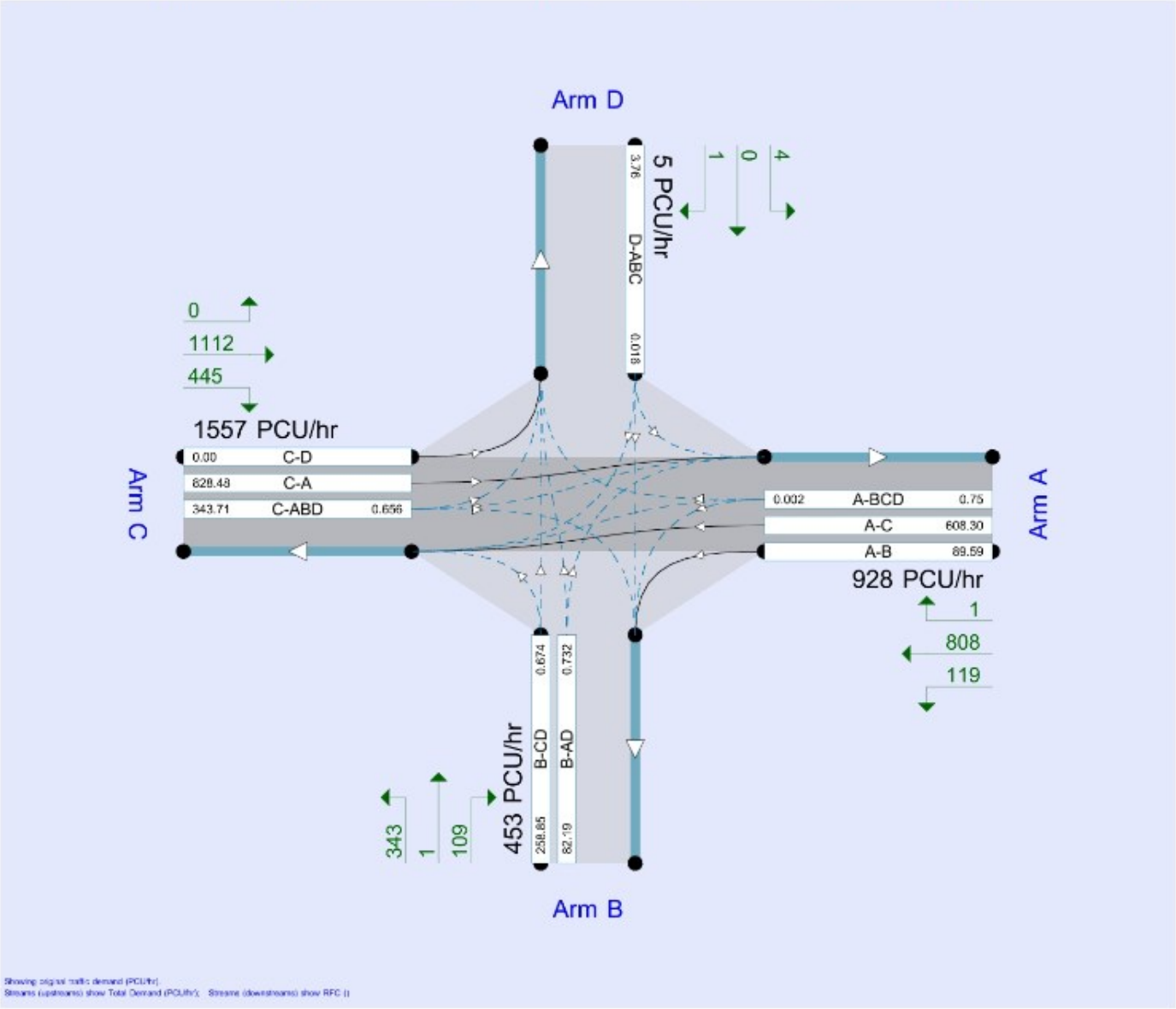

The junction diagram reflects the last run of Junctions.

Analysis Options

Vehicle length (m)	Calculate Queue Percentiles	Calculate detailed queueing delay	Calculate residual capacity	RFC Threshold	Average Delay threshold (s)	Queue threshold (PCU)
5.75				0.85	36.00	20.00

Demand Set Summary

Scenario name	Time Period name	Traffic profile type	Model start time (HH:mm)	Model finish time (HH:mm)	Time segment length (min)	Run automatically
Base 2031 + Dev	AM	ONE HOUR	07:30	09:00	15	✓
Base 2031 + Dev	PM	ONE HOUR	16:30	18:00	15	✓

J1 Ashford Road/Ham Lane/Pilgrims Way - Base 2031 + Dev, AM

Data Errors and Warnings

No errors or warnings

Analysis Set Details

ID	Name	Include in report	Network flow scaling factor (%)	Network capacity scaling factor (%)
A1	J1 Ashford Road/Ham Lane/Pilgrims Way	✓	100.000	100.000

Junction Network

Junctions

Junction	Name	Junction Type	Major road direction	Junction Delay (s)	Junction LOS
1	untitled	Crossroads	Two-way	9999999999.00	F

Junction Network Options

Driving side	Lighting
Left	Normal/unknown

Arms

Arms

Arm	Name	Description	Arm type
A	Ashford Road E		Major
B	Ham Lane S		Minor
C	Ashford Road W		Major
D	Pilgrims Way N		Minor

Major Arm Geometry

Arm	Width of carriageway (m)	Has kerbed central reserve	Has right turn bay	Width for right turn (m)	Visibility for right turn (m)	Blocks?	Blocking queue (PCU)
A	6.45		✓	2.80	250.0	✓	5.00
C	6.45		✓	2.60	160.0	✓	11.00

Geometries for Arm C are measured opposite Arm B. Geometries for Arm A (if relevant) are measured opposite Arm D.

Minor Arm Geometry

Arm	Minor arm type	Lane width (m)	Width at give-way (m)	Width at 5m (m)	Width at 10m (m)	Width at 15m (m)	Width at 20m (m)	Estimate flare length	Flare length (PCU)	Visibility to left (m)	Visibility to right (m)
B	One lane plus flare		10.00	7.25	5.30	4.00	3.50		2.00	35	19
D	One lane	3.00								35	65

Slope / Intercept / Capacity

Priority Intersection Slopes and Intercepts

Junction	Stream	Intercept (PCU/hr)	Slope for A-B	Slope for A-C	Slope for A-D	Slope for B-A	Slope for B-C	Slope for B-D	Slope for C-A	Slope for C-B	Slope for C-D	Slope for D-A	Slope for D-B	Slope for D-C
1	A-D	765.675	-	-	-	-	-	-	0.291	0.416	0.291	-	-	-
1	B-A	491.219	0.088	0.222	0.222	-	-	-	0.139	0.317	-	0.222	0.222	0.111
1	B-C	741.430	0.111	0.282	-	-	-	-	-	-	-	-	-	-
1	B-D, nearside lane	580.940	0.104	0.262	0.262	-	-	-	0.165	0.375	0.165	-	-	-
1	B-D, offside lane	491.219	0.088	0.222	0.222	-	-	-	0.139	0.317	0.139	-	-	-
1	C-B	695.641	0.264	0.264	0.378	-	-	-	-	-	-	-	-	-
1	D-A	664.856	-	-	-	-	-	-	0.253	-	0.100	-	-	-
1	D-B, nearside lane	520.941	0.148	0.148	0.336	-	-	-	0.235	0.235	0.093	-	-	-
1	D-B, offside lane	520.941	0.148	0.148	0.336	-	-	-	0.235	0.235	0.093	-	-	-
1	D-C	520.941	-	0.148	0.336	0.118	0.235	0.235	0.235	0.235	0.093	-	-	-

The slopes and intercepts shown above do NOT include any corrections or adjustments.

Streams may be combined, in which case capacity will be adjusted.

Values are shown for the first time segment only; they may differ for subsequent time segments.

Traffic Demand

Demand Set Details

ID	Scenario name	Time Period name	Traffic profile type	Model start time (HH:mm)	Model finish time (HH:mm)	Time segment length (min)	Run automatically
D5	Base 2031 + Dev	AM	ONE HOUR	07:30	09:00	15	✓

Vehicle mix varies over turn	Vehicle mix varies over entry	Vehicle mix source	PCU Factor for a HV (PCU)
✓	✓	HV Percentages	2.00

Demand overview (Traffic)

Arm	Linked arm	Profile type	Use O-D data	Average Demand (PCU/hr)	Scaling Factor (%)
A		ONE HOUR	✓	1305.00	100.000
B		ONE HOUR	✓	631.00	100.000
C		ONE HOUR	✓	1037.00	100.000
D		ONE HOUR	✓	9.00	100.000

Origin-Destination Data

Demand (PCU/hr)

		To			
		A	B	C	D
From	A	0.000	106.000	1199.000	0.000
	B	157.000	0.000	473.000	1.000
	C	767.000	270.000	0.000	0.000
	D	6.000	2.000	1.000	0.000

Proportions

		To			
		A	B	C	D
From	A	0.00	0.08	0.92	0.00
	B	0.25	0.00	0.75	0.00
	C	0.74	0.26	0.00	0.00
	D	0.67	0.22	0.11	0.00

Vehicle Mix

Heavy Vehicle proportion

		To			
		A	B	C	D
From	A	0	17	7	0
	B	35	0	8	0
	C	7	6	0	0
	D	100	0	0	0

Average PCU Per Veh

		To			
		A	B	C	D
From	A	1.000	1.166	1.070	1.000
	B	1.350	1.000	1.080	1.000
	C	1.070	1.060	1.000	1.000
	D	2.000	1.000	1.000	1.000

Detailed Demand Data

Demand for each time segment

Time Segment	Arm	Demand (PCU/hr)	Demand in PCU (PCU/hr)
07:30-07:45	A	982.47	982.47
	B	475.05	475.05
	C	780.71	780.71
	D	6.78	6.78
07:45-08:00	A	1173.17	1173.17
	B	567.26	567.26
	C	932.24	932.24
	D	8.09	8.09
08:00-08:15	A	1436.83	1436.83
	B	694.74	694.74
	C	1141.76	1141.76
	D	9.91	9.91
08:15-08:30	A	1436.83	1436.83
	B	694.74	694.74
	C	1141.76	1141.76
	D	9.91	9.91
08:30-08:45	A	1173.17	1173.17
	B	567.26	567.26
	C	932.24	932.24
	D	8.09	8.09
08:45-09:00	A	982.47	982.47
	B	475.05	475.05
	C	780.71	780.71
	D	6.78	6.78

Results

Results Summary for whole modelled period

Stream	Max RFC	Max delay (s)	Max Queue (PCU)	Max LOS	Average Demand (PCU/hr)	Total Junction Arrivals (PCU)
B-CD	9999999999.00	5574.45	433.9	F	434.94	652.41
B-AD	9999999999.00	5621.10	144.9	F	144.07	216.11
A-BCD	0.00	0.00	0.0	A	0.00	0.00
A-B					97.27	145.90
A-C					1100.22	1650.34
D-ABC	9999999999.00	9999999999.00	9.5	F	8.26	12.39
C-ABD	0.94	56.68	11.6	F	389.69	584.53
C-D					0.00	0.00
C-A					561.88	842.83

Main Results for each time segment

Main results: (07:30-07:45)

Stream	Total Demand (PCU/hr)	Junction demand (PCU/hr)	Junction Arrivals (PCU)	Bypass demand (PCU/hr)	Capacity (PCU/hr)	RFC	Throughput (PCU/hr)	Start queue (PCU)	End queue (PCU)	Delay (s)	LOS
B-CD	356.80	356.80	89.20	0.00	291.11	1.226	276.29	0.0	20.1	173.191	F
B-AD	118.25	118.25	29.56	0.00	96.48	1.226	83.50	0.0	8.7	275.577	F
A-BCD	0.00	0.00	0.00	0.00	1087.09	0.000	0.00	0.0	0.0	0.000	A
A-B	79.80	79.80	19.95	0.00			79.80				
A-C	902.67	902.67	225.67	0.00			902.67				
D-ABC	6.78	6.78	1.69	0.00	286.58	0.024	6.63	0.0	0.0	9999999999.000	F
C-ABD	203.37	203.37	50.84	0.00	436.23	0.466	199.78	0.0	0.9	15.913	C
C-D	0.00	0.00	0.00	0.00			0.00				
C-A	577.34	577.34	144.33	0.00			577.34				

Main results: (07:45-08:00)

Stream	Total Demand (PCU/hr)	Junction demand (PCU/hr)	Junction Arrivals (PCU)	Bypass demand (PCU/hr)	Capacity (PCU/hr)	RFC	Throughput (PCU/hr)	Start queue (PCU)	End queue (PCU)	Delay (s)	LOS
B-CD	426.12	426.12	106.53	0.00	173.56	2.455	173.38	20.1	83.3	2521.387	F
B-AD	141.14	141.14	35.28	0.00	60.26	2.342	59.70	8.7	29.0	2772.379	F
A-BCD	0.00	0.00	0.00	0.00	980.17	0.000	0.00	0.0	0.0	0.000	A
A-B	95.29	95.29	23.82	0.00			95.29				
A-C	1077.88	1077.88	269.47	0.00			1077.88				
D-ABC	8.09	8.09	2.02	0.00	14.20	0.570	5.03	0.0	0.8	9999999999.000	F
C-ABD	246.28	246.28	61.57	0.00	391.26	0.629	243.08	0.9	1.7	25.227	D
C-D	0.00	0.00	0.00	0.00			0.00				
C-A	685.96	685.96	171.49	0.00			685.96				

Main results: (08:00-08:15)

Stream	Total Demand (PCU/hr)	Junction demand (PCU/hr)	Junction Arrivals (PCU)	Bypass demand (PCU/hr)	Capacity (PCU/hr)	RFC	Throughput (PCU/hr)	Start queue (PCU)	End queue (PCU)	Delay (s)	LOS
B-CD	521.88	521.88	130.47	0.00	0.00	9999999999.000	0.00	83.3	213.8	2385.264	F
B-AD	172.86	172.86	43.22	0.00	0.00	9999999999.000	0.00	29.0	72.3	2431.247	F
A-BCD	0.00	0.00	0.00	0.00	833.92	0.000	0.00	0.0	0.0	0.000	A
A-B	116.71	116.71	29.18	0.00			116.71				
A-C	1320.12	1320.12	330.03	0.00			1320.12				
D-ABC	9.91	9.91	2.48	0.00	0.00	9999999999.000	0.00	0.8	3.3	9999999999.000	F
C-ABD	719.41	719.41	179.85	0.00	763.57	0.942	693.54	1.7	8.2	41.220	E
C-D	0.00	0.00	0.00	0.00			0.00				
C-A	422.35	422.35	105.59	0.00			422.35				

Main results: (08:15-08:30)

Stream	Total Demand (PCU/hr)	Junction demand (PCU/hr)	Junction Arrivals (PCU)	Bypass demand (PCU/hr)	Capacity (PCU/hr)	RFC	Throughput (PCU/hr)	Start queue (PCU)	End queue (PCU)	Delay (s)	LOS
B-CD	521.88	521.88	130.47	0.00	0.00	9999999999.000	0.00	213.8	344.3	2964.129	F
B-AD	172.86	172.86	43.22	0.00	0.00	9999999999.000	0.00	72.3	115.5	2998.194	F
A-BCD	0.00	0.00	0.00	0.00	816.18	0.000	0.00	0.0	0.0	0.000	A
A-B	116.71	116.71	29.18	0.00			116.71				
A-C	1320.12	1320.12	330.03	0.00			1320.12				
D-ABC	9.91	9.91	2.48	0.00	0.00	9999999999.000	0.00	3.3	5.8	9999999999.000	F
C-ABD	719.41	719.41	179.85	0.00	764.62	0.941	705.48	8.2	11.6	56.681	F
C-D	0.00	0.00	0.00	0.00			0.00				
C-A	422.35	422.35	105.59	0.00			422.35				

Main results: (08:30-08:45)

Stream	Total Demand (PCU/hr)	Junction demand (PCU/hr)	Junction Arrivals (PCU)	Bypass demand (PCU/hr)	Capacity (PCU/hr)	RFC	Throughput (PCU/hr)	Start queue (PCU)	End queue (PCU)	Delay (s)	LOS
B-CD	426.12	426.12	106.53	0.00	149.91	2.842	149.91	344.3	413.3	5394.229	F
B-AD	141.14	141.14	35.28	0.00	50.14	2.815	50.13	115.5	138.2	5450.668	F
A-BCD	0.00	0.00	0.00	0.00	949.55	0.000	0.00	0.0	0.0	0.000	A
A-B	95.29	95.29	23.82	0.00			95.29				
A-C	1077.88	1077.88	269.47	0.00			1077.88				
D-ABC	8.09	8.09	2.02	0.00	0.00	9999999999.000	0.00	5.8	7.8	9999999999.000	F
C-ABD	246.28	246.28	61.57	0.00	392.85	0.627	284.87	11.6	2.0	45.670	E
C-D	0.00	0.00	0.00	0.00			0.00				
C-A	685.96	685.96	171.49	0.00			685.96				

Main results: (08:45-09:00)

Stream	Total Demand (PCU/hr)	Junction demand (PCU/hr)	Junction Arrivals (PCU)	Bypass demand (PCU/hr)	Capacity (PCU/hr)	RFC	Throughput (PCU/hr)	Start queue (PCU)	End queue (PCU)	Delay (s)	LOS
B-CD	356.85	356.85	89.21	0.00	274.33	1.301	274.32	413.3	433.9	5574.455	F
B-AD	118.20	118.20	29.55	0.00	91.59	1.290	91.56	138.2	144.9	5621.097	F
A-BCD	0.00	0.00	0.00	0.00	1080.09	0.000	0.00	0.0	0.0	0.000	A
A-B	79.80	79.80	19.95	0.00			79.80				
A-C	902.67	902.67	225.67	0.00			902.67				
D-ABC	6.78	6.78	1.69	0.00	0.00	9999999999.000	0.00	7.8	9.5	9999999999.000	F
C-ABD	203.37	203.37	50.84	0.00	436.26	0.466	207.53	2.0	1.0	16.970	C
C-D	0.00	0.00	0.00	0.00			0.00				
C-A	577.34	577.34	144.33	0.00			577.34				

J1 Ashford Road/Ham Lane/Pilgrims Way - Base 2031 + Dev, PM

Data Errors and Warnings

No errors or warnings

Analysis Set Details

ID	Name	Include in report	Network flow scaling factor (%)	Network capacity scaling factor (%)
A1	J1 Ashford Road/Ham Lane/Pilgrims Way	✓	100.000	100.000

Junction Network

Junctions

Junction	Name	Junction Type	Major road direction	Junction Delay (s)	Junction LOS
1	untitled	Crossroads	Two-way	9999999999.00	F

Junction Network Options

[same as above]

Arms

Arms

[same as above]

Major Arm Geometry

[same as above]

Minor Arm Geometry

[same as above]

Slope / Intercept / Capacity

[same as above]

Traffic Demand

Demand Set Details

ID	Scenario name	Time Period name	Traffic profile type	Model start time (HH:mm)	Model finish time (HH:mm)	Time segment length (min)	Run automatically
D6	Base 2031 + Dev	PM	ONE HOUR	16:30	18:00	15	✓

Vehicle mix varies over turn	Vehicle mix varies over entry	Vehicle mix source	PCU Factor for a HV (PCU)
✓	✓	HV Percentages	2.00

Demand overview (Traffic)

Arm	Linked arm	Profile type	Use O-D data	Average Demand (PCU/hr)	Scaling Factor (%)
A		ONE HOUR	✓	928.00	100.000
B		ONE HOUR	✓	453.00	100.000
C		ONE HOUR	✓	1557.00	100.000
D		ONE HOUR	✓	5.00	100.000

Origin-Destination Data

Demand (PCU/hr)

		To			
		A	B	C	D
From	A	0.000	119.000	808.000	1.000
	B	109.000	0.000	343.000	1.000
	C	1112.000	445.000	0.000	0.000
	D	4.000	0.000	1.000	0.000

Proportions

		To			
		A	B	C	D
From	A	0.00	0.13	0.87	0.00
	B	0.24	0.00	0.76	0.00
	C	0.71	0.29	0.00	0.00
	D	0.80	0.00	0.20	0.00

Vehicle Mix

Heavy Vehicle proportion

		To			
		A	B	C	D
From	A	0	0	3	0
	B	5	0	3	0
	C	1	12	0	0
	D	0	0	0	0

Average PCU Per Veh

		To			
		A	B	C	D
From	A	1.000	1.000	1.030	1.000
	B	1.050	1.000	1.030	1.000
	C	1.010	1.120	1.000	1.000
	D	1.000	1.000	1.000	1.000

Detailed Demand Data

Demand for each time segment

Time Segment	Arm	Demand (PCU/hr)	Demand in PCU (PCU/hr)
16:30-16:45	A	698.65	698.65
	B	341.04	341.04
	C	1172.19	1172.19
	D	3.76	3.76
16:45-17:00	A	834.25	834.25
	B	407.24	407.24
	C	1399.71	1399.71
	D	4.49	4.49
17:00-17:15	A	1021.75	1021.75
	B	498.76	498.76
	C	1714.29	1714.29
	D	5.51	5.51
17:15-17:30	A	1021.75	1021.75
	B	498.76	498.76
	C	1714.29	1714.29
	D	5.51	5.51
17:30-17:45	A	834.25	834.25
	B	407.24	407.24
	C	1399.71	1399.71
	D	4.49	4.49
17:45-18:00	A	698.65	698.65
	B	341.04	341.04
	C	1172.19	1172.19
	D	3.76	3.76

Results

Results Summary for whole modelled period

Stream	Max RFC	Max delay (s)	Max Queue (PCU)	Max LOS	Average Demand (PCU/hr)	Total Junction Arrivals (PCU)
B-CD	9999999999.00	9999999999.00	326.7	F	315.64	473.46
B-AD	9999999999.00	9999999999.00	104.4	F	100.04	150.06
A-BCD	0.01	27.41	0.0	D	0.92	1.38
A-B					109.20	163.79
A-C					741.43	1112.15
D-ABC	9999999999.00	9999999999.00	6.0	F	4.59	6.88
C-ABD	1.15	644.59	114.4	F	871.21	1306.82
C-D					0.00	0.00
C-A					557.52	836.28

Main Results for each time segment

Main results: (16:30-16:45)

Stream	Total Demand (PCU/hr)	Junction demand (PCU/hr)	Junction Arrivals (PCU)	Bypass demand (PCU/hr)	Capacity (PCU/hr)	RFC	Throughput (PCU/hr)	Start queue (PCU)	End queue (PCU)	Delay (s)	LOS
B-CD	258.85	258.85	64.71	0.00	384.06	0.674	251.07	0.0	1.9	9999999999.000	F
B-AD	82.19	82.19	20.55	0.00	112.31	0.732	74.06	0.0	2.0	9999999999.000	F
A-BCD	0.75	0.75	0.19	0.00	382.98	0.002	0.75	0.0	0.0	9.418	A
A-B	89.59	89.59	22.40	0.00			89.59				
A-C	608.30	608.30	152.08	0.00			608.30				
D-ABC	3.76	3.76	0.94	0.00	242.13	0.016	3.70	0.0	0.0	9999999999.000	F
C-ABD	343.71	343.71	85.93	0.00	524.20	0.656	335.60	0.0	2.0	20.567	C
C-D	0.00	0.00	0.00	0.00			0.00				
C-A	828.48	828.48	207.12	0.00			828.48				

Main results: (16:45-17:00)

Stream	Total Demand (PCU/hr)	Junction demand (PCU/hr)	Junction Arrivals (PCU)	Bypass demand (PCU/hr)	Capacity (PCU/hr)	RFC	Throughput (PCU/hr)	Start queue (PCU)	End queue (PCU)	Delay (s)	LOS
B-CD	309.25	309.25	77.31	0.00	146.24	2.115	144.54	1.9	43.1	9999999999.000	F
B-AD	97.99	97.99	24.50	0.00	48.95	2.002	47.35	2.0	14.7	9999999999.000	F
A-BCD	0.90	0.90	0.22	0.00	305.35	0.003	0.90	0.0	0.0	11.823	B
A-B	106.98	106.98	26.74	0.00			106.98				
A-C	726.38	726.38	181.59	0.00			726.38				
D-ABC	4.49	4.49	1.12	0.00	0.00	9999999999.000	0.00	0.0	1.1	9999999999.000	F
C-ABD	555.61	555.61	138.90	0.00	666.69	0.833	542.21	2.0	5.4	31.185	D
C-D	0.00	0.00	0.00	0.00			0.00				
C-A	844.10	844.10	211.02	0.00			844.10				

Main results: (17:00-17:15)

Stream	Total Demand (PCU/hr)	Junction demand (PCU/hr)	Junction Arrivals (PCU)	Bypass demand (PCU/hr)	Capacity (PCU/hr)	RFC	Throughput (PCU/hr)	Start queue (PCU)	End queue (PCU)	Delay (s)	LOS
B-CD	378.75	378.75	94.69	0.00	0.00	9999999999.000	0.00	43.1	137.8	9999999999.000	F
B-AD	120.01	120.01	30.00	0.00	0.00	9999999999.000	0.00	14.7	44.7	9999999999.000	F
A-BCD	1.10	1.10	0.28	0.00	197.81	0.006	1.09	0.0	0.0	18.299	C
A-B	131.02	131.02	32.76	0.00			131.02				
A-C	889.62	889.62	222.41	0.00			889.62				
D-ABC	5.51	5.51	1.38	0.00	0.00	9999999999.000	0.00	1.1	2.5	9999999999.000	F
C-ABD	1714.29	1714.29	428.57	0.00	1504.99	1.139	1510.43	5.4	56.3	94.997	F
C-D	0.00	0.00	0.00	0.00			0.00				
C-A	0.00	0.00	0.00	0.00			0.00				

Junctions 9

PICADY 9 - Priority Intersection Module

Version: 9.0.0.4211 []
© Copyright TRL Limited, 2015

For sales and distribution information, program advice and maintenance, contact TRL:
Tel: +44 (0)1344 770758 email: software@trl.co.uk Web: http://www.trlsoftware.co.uk

The users of this computer program for the solution of an engineering problem are in no way relieved of their responsibility for the correctness of the solution

Filename: J2 Ashford Road Maidstone Road.j9
Path: P:\Southampton\ITW\Projects\347826 - Maidstone BC Jct Assessment\AD. Lenham\PICADY models for Addendum\J2 Ashford Road Maidstone Road
Report generation date: 06/08/2015 08:56:49

»J2 Ashford Road/Maidstone Road - Base 2031 + Dev, AM
»J2 Ashford Road/Maidstone Road - Base 2031 + Dev, PM

Summary of junction performance

	AM				PM			
	Queue (PCU)	Delay (s)	RFC	LOS	Queue (PCU)	Delay (s)	RFC	LOS
	J2 Ashford Road / Maidstone Road - Base 2031 + Dev							
Stream B-AC	3.6	37.81	0.80	E	0.8	11.97	0.45	B
Stream C-AB	0.8	16.15	0.42	C	2.1	22.80	0.68	C
Stream C-A								
Stream A-B								
Stream A-C								

Values shown are the highest values encountered over all time segments. Delay is the maximum value of average delay per arriving vehicle.

File summary

File Description

Title	(untitled)
Location	
Site number	
Date	30/06/2015
Version	
Status	(new file)
Identifier	
Client	
Jobnumber	
Enumerator	MOTTMAC"rap67683
Description	

Units

Distance units	Speed units	Traffic units input	Traffic units results	Flow units	Average delay units	Total delay units	Rate of delay units
m	kph	PCU	PCU	perHour	s	-Min	perMin

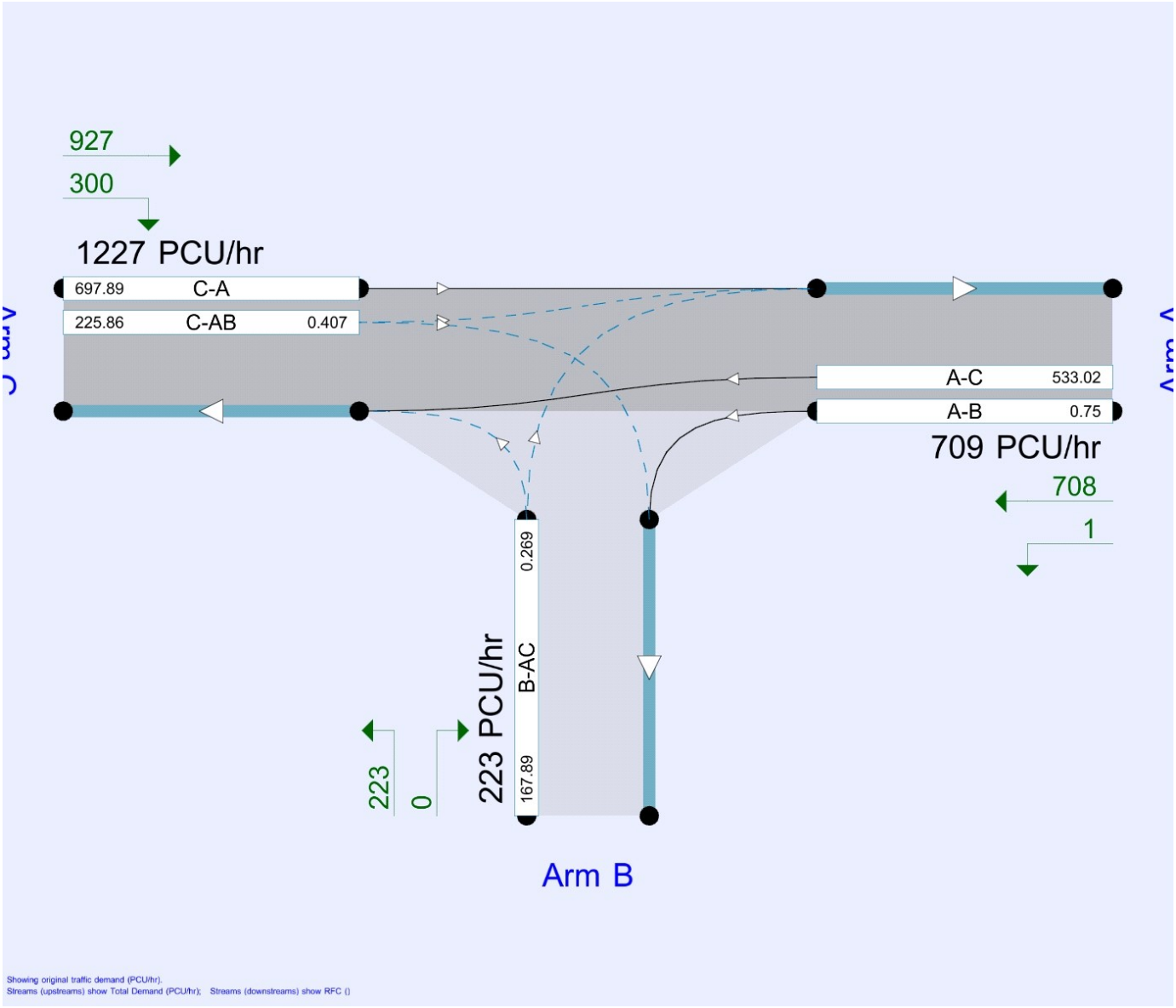

The junction diagram reflects the last run of Junctions.

Analysis Options

Vehicle length (m)	Calculate Queue Percentiles	Calculate detailed queueing delay	Calculate residual capacity	RFC Threshold	Average Delay threshold (s)	Queue threshold (PCU)
5.75				0.85	36.00	20.00

Demand Set Summary

Scenario name	Time Period name	Traffic profile type	Model start time (HH:mm)	Model finish time (HH:mm)	Time segment length (min)	Run automatically
Base 2031 + Dev	AM	ONE HOUR	07:15	08:45	15	✓
Base 2031 + Dev	PM	ONE HOUR	16:30	18:00	15	✓

J2 Ashford Road/Maidstone Road - Base 2031 + Dev, AM

Data Errors and Warnings

No errors or warnings

Analysis Set Details

ID	Name	Include in report	Network flow scaling factor (%)	Network capacity scaling factor (%)
A1	J2 Ashford Road/Maidstone Road	✓	100.000	100.000

Junction Network

Junctions

Junction	Name	Junction Type	Major road direction	Junction Delay (s)	Junction LOS
1	untitled	T-Junction	Two-way	6.65	A

Junction Network Options

Driving side	Lighting
Left	Normal/unknown

Arms

Arms

Arm	Name	Description	Arm type
A	Ashford Road E		Major
B	Maidstone Road S		Minor
C	Ashford Road W		Major

Major Arm Geometry

Arm	Width of carriageway (m)	Has kerbed central reserve	Has right turn bay	Width for right turn (m)	Visibility for right turn (m)	Blocks?	Blocking queue (PCU)
C	6.00		✓	2.80	142.0	✓	12.00

Geometries for Arm C are measured opposite Arm B. Geometries for Arm A (if relevant) are measured opposite Arm D.

Minor Arm Geometry

Arm	Minor arm type	Lane width (m)	Visibility to left (m)	Visibility to right (m)
B	One lane	4.00	130	145

Slope / Intercept / Capacity

Priority Intersection Slopes and Intercepts

Junction	Stream	Intercept (PCU/hr)	Slope for A-B	Slope for A-C	Slope for C-A	Slope for C-B
1	B-A	654.254	0.119	0.301	0.189	0.430
1	B-C	786.824	0.121	0.305	-	-
1	C-B	699.047	0.271	0.271	-	-

The slopes and intercepts shown above do NOT include any corrections or adjustments.

Streams may be combined, in which case capacity will be adjusted.

Values are shown for the first time segment only; they may differ for subsequent time segments.

Traffic Demand

Demand Set Details

ID	Scenario name	Time Period name	Traffic profile type	Model start time (HH:mm)	Model finish time (HH:mm)	Time segment length (min)	Run automatically
D5	Base 2031 + Dev	AM	ONE HOUR	07:15	08:45	15	✓

Vehicle mix varies over turn	Vehicle mix varies over entry	Vehicle mix source	PCU Factor for a HV (PCU)
✓	✓	HV Percentages	2.00

Demand overview (Traffic)

Arm	Linked arm	Profile type	Use O-D data	Average Demand (PCU/hr)	Scaling Factor (%)
A		ONE HOUR	✓	995.00	100.000
B		ONE HOUR	✓	327.00	100.000
C		ONE HOUR	✓	914.00	100.000

Origin-Destination Data

Demand (PCU/hr)

		To		
		A	B	C
From	A	0.000	0.000	995.000
	B	0.000	0.000	327.000
	C	759.000	155.000	0.000

Proportions

		To		
		A	B	C
From	A	0.00	0.00	1.00
	B	0.00	0.00	1.00
	C	0.83	0.17	0.00

Vehicle Mix

Heavy Vehicle proportion

		To		
		A	B	C
From	A	0	0	7
	B	0	0	1
	C	6	4	0

Average PCU Per Veh

		To		
		A	B	C
From	A	1.000	1.000	1.070
	B	1.000	1.000	1.010
	C	1.060	1.040	1.000

Detailed Demand Data

Demand for each time segment

Time Segment	Arm	Demand (PCU/hr)	Demand in PCU (PCU/hr)
07:15-07:30	A	749.09	749.09
	B	246.18	246.18
	C	688.11	688.11
07:30-07:45	A	894.48	894.48
	B	293.97	293.97
	C	821.67	821.67
07:45-08:00	A	1095.52	1095.52
	B	360.03	360.03
	C	1006.33	1006.33
08:00-08:15	A	1095.52	1095.52
	B	360.03	360.03
	C	1006.33	1006.33
08:15-08:30	A	894.48	894.48
	B	293.97	293.97
	C	821.67	821.67
08:30-08:45	A	749.09	749.09
	B	246.18	246.18
	C	688.11	688.11

Results

Results Summary for whole modelled period

Stream	Max RFC	Max delay (s)	Max Queue (PCU)	Max LOS	Average Demand (PCU/hr)	Total Junction Arrivals (PCU)
B-AC	0.80	37.81	3.6	E	300.06	450.09
C-AB	0.42	16.15	0.8	C	142.24	213.36
C-A					696.47	1044.70
A-B					0.00	0.00
A-C					913.03	1369.54

Main Results for each time segment

Main results: (07:15-07:30)

Stream	Total Demand (PCU/hr)	Junction demand (PCU/hr)	Junction Arrivals (PCU)	Bypass demand (PCU/hr)	Capacity (PCU/hr)	RFC	Throughput (PCU/hr)	Start queue (PCU)	End queue (PCU)	Delay (s)	LOS
B-AC	246.18	246.18	61.55	0.00	558.46	0.441	243.07	0.0	0.8	11.423	B
C-AB	116.69	116.69	29.17	0.00	496.16	0.235	115.43	0.0	0.3	9.802	A
C-A	571.41	571.41	142.85	0.00			571.41				
A-B	0.00	0.00	0.00	0.00			0.00				
A-C	749.09	749.09	187.27	0.00			749.09				

Main results: (07:30-07:45)

Stream	Total Demand (PCU/hr)	Junction demand (PCU/hr)	Junction Arrivals (PCU)	Bypass demand (PCU/hr)	Capacity (PCU/hr)	RFC	Throughput (PCU/hr)	Start queue (PCU)	End queue (PCU)	Delay (s)	LOS
B-AC	293.97	293.97	73.49	0.00	514.13	0.572	291.89	0.8	1.3	16.153	C
C-AB	139.34	139.34	34.84	0.00	456.78	0.305	138.81	0.3	0.4	11.754	B
C-A	682.33	682.33	170.58	0.00			682.33				
A-B	0.00	0.00	0.00	0.00			0.00				
A-C	894.48	894.48	223.62	0.00			894.48				

Main results: (07:45-08:00)

Stream	Total Demand (PCU/hr)	Junction demand (PCU/hr)	Junction Arrivals (PCU)	Bypass demand (PCU/hr)	Capacity (PCU/hr)	RFC	Throughput (PCU/hr)	Start queue (PCU)	End queue (PCU)	Delay (s)	LOS
B-AC	360.03	360.03	90.01	0.00	452.85	0.795	351.92	1.3	3.3	33.609	D
C-AB	170.68	170.68	42.67	0.00	402.37	0.424	169.49	0.4	0.7	15.994	C
C-A	835.66	835.66	208.91	0.00			835.66				
A-B	0.00	0.00	0.00	0.00			0.00				
A-C	1095.52	1095.52	273.88	0.00			1095.52				

Main results: (08:00-08:15)

Stream	Total Demand (PCU/hr)	Junction demand (PCU/hr)	Junction Arrivals (PCU)	Bypass demand (PCU/hr)	Capacity (PCU/hr)	RFC	Throughput (PCU/hr)	Start queue (PCU)	End queue (PCU)	Delay (s)	LOS
B-AC	360.03	360.03	90.01	0.00	452.85	0.795	359.04	3.3	3.6	37.806	E
C-AB	170.68	170.68	42.67	0.00	402.37	0.424	170.63	0.7	0.8	16.147	C
C-A	835.66	835.66	208.91	0.00			835.66				
A-B	0.00	0.00	0.00	0.00			0.00				
A-C	1095.52	1095.52	273.88	0.00			1095.52				

Main results: (08:15-08:30)

Stream	Total Demand (PCU/hr)	Junction demand (PCU/hr)	Junction Arrivals (PCU)	Bypass demand (PCU/hr)	Capacity (PCU/hr)	RFC	Throughput (PCU/hr)	Start queue (PCU)	End queue (PCU)	Delay (s)	LOS
B-AC	293.97	293.97	73.49	0.00	514.13	0.572	302.64	3.6	1.4	17.835	C
C-AB	139.34	139.34	34.84	0.00	456.78	0.305	140.50	0.8	0.5	11.879	B
C-A	682.33	682.33	170.58	0.00			682.33				
A-B	0.00	0.00	0.00	0.00			0.00				
A-C	894.48	894.48	223.62	0.00			894.48				

Main results: (08:30-08:45)

Stream	Total Demand (PCU/hr)	Junction demand (PCU/hr)	Junction Arrivals (PCU)	Bypass demand (PCU/hr)	Capacity (PCU/hr)	RFC	Throughput (PCU/hr)	Start queue (PCU)	End queue (PCU)	Delay (s)	LOS
B-AC	246.18	246.18	61.55	0.00	558.46	0.441	248.54	1.4	0.8	11.821	B
C-AB	116.69	116.69	29.17	0.00	496.16	0.235	117.25	0.5	0.3	9.897	A
C-A	571.41	571.41	142.85	0.00			571.41				
A-B	0.00	0.00	0.00	0.00			0.00				
A-C	749.09	749.09	187.27	0.00			749.09				

J2 Ashford Road/Maidstone Road - Base 2031 + Dev, PM

Data Errors and Warnings

No errors or warnings

Analysis Set Details

ID	Name	Include in report	Network flow scaling factor (%)	Network capacity scaling factor (%)
A1	J2 Ashford Road/Maidstone Road	✓	100.000	100.000

Junction Network

Junctions

Junction	Name	Junction Type	Major road direction	Junction Delay (s)	Junction LOS
1	untitled	T-Junction	Two-way	4.43	A

Junction Network Options

[same as above]

Arms

Arms

[same as above]

Major Arm Geometry

[same as above]

Minor Arm Geometry

[same as above]

Slope / Intercept / Capacity

[same as above]

Traffic Demand

Demand Set Details

ID	Scenario name	Time Period name	Traffic profile type	Model start time (HH:mm)	Model finish time (HH:mm)	Time segment length (min)	Run automatically
D6	Base 2031 + Dev	PM	ONE HOUR	16:30	18:00	15	✓

Vehicle mix varies over turn	Vehicle mix varies over entry	Vehicle mix source	PCU Factor for a HV (PCU)
✓	✓	HV Percentages	2.00

Demand overview (Traffic)

Arm	Linked arm	Profile type	Use O-D data	Average Demand (PCU/hr)	Scaling Factor (%)
A		ONE HOUR	✓	709.00	100.000
B		ONE HOUR	✓	223.00	100.000
C		ONE HOUR	✓	1227.00	100.000

Origin-Destination Data

Demand (PCU/hr)

		To		
		A	B	C
From	A	0.000	1.000	708.000
	B	0.000	0.000	223.000
	C	927.000	300.000	0.000

Proportions

		To		
		A	B	C
From	A	0.00	0.00	1.00
	B	0.00	0.00	1.00
	C	0.76	0.24	0.00

Vehicle Mix

Heavy Vehicle proportion

		To		
		A	B	C
From	A	0	0	5
	B	0	0	1
	C	3	2	0

Average PCU Per Veh

		To		
		A	B	C
From	A	1.000	1.000	1.050
	B	1.000	1.000	1.010
	C	1.030	1.023	1.000

Detailed Demand Data

Demand for each time segment

Time Segment	Arm	Demand (PCU/hr)	Demand in PCU (PCU/hr)
16:30-16:45	A	533.77	533.77
	B	167.89	167.89
	C	923.75	923.75
16:45-17:00	A	637.38	637.38
	B	200.47	200.47
	C	1103.05	1103.05
17:00-17:15	A	780.62	780.62
	B	245.53	245.53
	C	1350.95	1350.95
17:15-17:30	A	780.62	780.62
	B	245.53	245.53
	C	1350.95	1350.95
17:30-17:45	A	637.38	637.38
	B	200.47	200.47
	C	1103.05	1103.05
17:45-18:00	A	533.77	533.77
	B	167.89	167.89
	C	923.75	923.75

Results

Results Summary for whole modelled period

Stream	Max RFC	Max delay (s)	Max Queue (PCU)	Max LOS	Average Demand (PCU/hr)	Total Junction Arrivals (PCU)
B-AC	0.45	11.97	0.8	B	204.63	306.94
C-AB	0.68	22.80	2.1	C	277.73	416.60
C-A					848.18	1272.28
A-B					0.92	1.38
A-C					649.67	974.51

Main Results for each time segment

Main results: (16:30-16:45)

Stream	Total Demand (PCU/hr)	Junction demand (PCU/hr)	Junction Arrivals (PCU)	Bypass demand (PCU/hr)	Capacity (PCU/hr)	RFC	Throughput (PCU/hr)	Start queue (PCU)	End queue (PCU)	Delay (s)	LOS
B-AC	167.89	167.89	41.97	0.00	624.24	0.269	166.42	0.0	0.4	7.917	A
C-AB	225.86	225.86	56.47	0.00	554.49	0.407	223.11	0.0	0.7	11.026	B
C-A	697.89	697.89	174.47	0.00			697.89				
A-B	0.75	0.75	0.19	0.00			0.75				
A-C	533.02	533.02	133.25	0.00			533.02				

Main results: (16:45-17:00)

Stream	Total Demand (PCU/hr)	Junction demand (PCU/hr)	Junction Arrivals (PCU)	Bypass demand (PCU/hr)	Capacity (PCU/hr)	RFC	Throughput (PCU/hr)	Start queue (PCU)	End queue (PCU)	Delay (s)	LOS
B-AC	200.47	200.47	50.12	0.00	592.68	0.338	199.91	0.4	0.5	9.243	A
C-AB	269.86	269.86	67.47	0.00	526.74	0.512	268.44	0.7	1.0	14.176	B
C-A	833.19	833.19	208.30	0.00			833.19				
A-B	0.90	0.90	0.22	0.00			0.90				
A-C	636.48	636.48	159.12	0.00			636.48				

Main results: (17:00-17:15)

Stream	Total Demand (PCU/hr)	Junction demand (PCU/hr)	Junction Arrivals (PCU)	Bypass demand (PCU/hr)	Capacity (PCU/hr)	RFC	Throughput (PCU/hr)	Start queue (PCU)	End queue (PCU)	Delay (s)	LOS
B-AC	245.53	245.53	61.38	0.00	549.05	0.447	244.37	0.5	0.8	11.887	B
C-AB	337.47	337.47	84.37	0.00	498.17	0.677	333.52	1.0	2.0	21.871	C
C-A	1013.48	1013.48	253.37	0.00			1013.48				
A-B	1.10	1.10	0.28	0.00			1.10				
A-C	779.52	779.52	194.88	0.00			779.52				

Main results: (17:15-17:30)

Stream	Total Demand (PCU/hr)	Junction demand (PCU/hr)	Junction Arrivals (PCU)	Bypass demand (PCU/hr)	Capacity (PCU/hr)	RFC	Throughput (PCU/hr)	Start queue (PCU)	End queue (PCU)	Delay (s)	LOS
B-AC	245.53	245.53	61.38	0.00	549.05	0.447	245.49	0.8	0.8	11.974	B
C-AB	337.47	337.47	84.37	0.00	498.20	0.677	337.18	2.0	2.1	22.802	C
C-A	1013.48	1013.48	253.37	0.00			1013.48				
A-B	1.10	1.10	0.28	0.00			1.10				
A-C	779.52	779.52	194.88	0.00			779.52				

Main results: (17:30-17:45)

Stream	Total Demand (PCU/hr)	Junction demand (PCU/hr)	Junction Arrivals (PCU)	Bypass demand (PCU/hr)	Capacity (PCU/hr)	RFC	Throughput (PCU/hr)	Start queue (PCU)	End queue (PCU)	Delay (s)	LOS
B-AC	200.47	200.47	50.12	0.00	592.68	0.338	201.61	0.8	0.5	9.325	A
C-AB	269.86	269.86	67.47	0.00	526.78	0.512	273.85	2.1	1.1	14.783	B
C-A	833.19	833.19	208.30	0.00			833.19				
A-B	0.90	0.90	0.22	0.00			0.90				
A-C	636.48	636.48	159.12	0.00			636.48				

Main results: (17:45-18:00)

Stream	Total Demand (PCU/hr)	Junction demand (PCU/hr)	Junction Arrivals (PCU)	Bypass demand (PCU/hr)	Capacity (PCU/hr)	RFC	Throughput (PCU/hr)	Start queue (PCU)	End queue (PCU)	Delay (s)	LOS
B-AC	167.89	167.89	41.97	0.00	624.24	0.269	168.48	0.5	0.4	7.989	A
C-AB	225.86	225.86	56.47	0.00	554.50	0.407	227.43	1.1	0.7	11.315	B
C-A	697.89	697.89	174.47	0.00			697.89				
A-B	0.75	0.75	0.19	0.00			0.75				
A-C	533.02	533.02	133.25	0.00			533.02				

Junctions 9

PICADY 9 - Priority Intersection Module

Version: 9.0.0.4211 []
© Copyright TRL Limited, 2015

For sales and distribution information, program advice and maintenance, contact TRL:
Tel: +44 (0)1344 770758 email: software@trl.co.uk Web: http://www.trlsoftware.co.uk

The users of this computer program for the solution of an engineering problem are in no way relieved of their responsibility for the correctness of the solution

Filename: J3 Ham Lane Old Ham Lane.j9
Path: P:\Southampton\ITW\Projects\347826 - Maidstone BC Jct Assessment\AD. Lenham\PICADY models for Addendum\J3 Ham Lane Old Ham Lane
Report generation date: 06/08/2015 08:58:49

»J3 Ham Lane/Old Ham Lane - Base 2031 + Dev, AM
»J3 Ham Lane/Old Ham Lane - Base 2031 + Dev, PM

Summary of junction performance

	AM				PM			
	Queue (PCU)	Delay (s)	RFC	LOS	Queue (PCU)	Delay (s)	RFC	LOS
	J3 Ham Lane/Old Ham Lane - Base 2031 + Dev							
Stream B-C	0.0	6.44	0.02	A	0.0	6.63	0.02	A
Stream B-A	0.0	9.38	0.02	A	0.0	10.36	0.01	B
Stream C-AB	0.0	4.95	0.01	A	0.1	5.46	0.04	A
Stream C-A								
Stream A-B								
Stream A-C								

Values shown are the highest values encountered over all time segments. Delay is the maximum value of average delay per arriving vehicle.

File summary

File Description

Title	(untitled)
Location	
Site number	
Date	30/06/2015
Version	
Status	(new file)
Identifier	
Client	
Jobnumber	
Enumerator	MOTTMAC"rap67683
Description	

Units

Distance units	Speed units	Traffic units input	Traffic units results	Flow units	Average delay units	Total delay units	Rate of delay units
m	kph	PCU	PCU	perHour	s	-Min	perMin

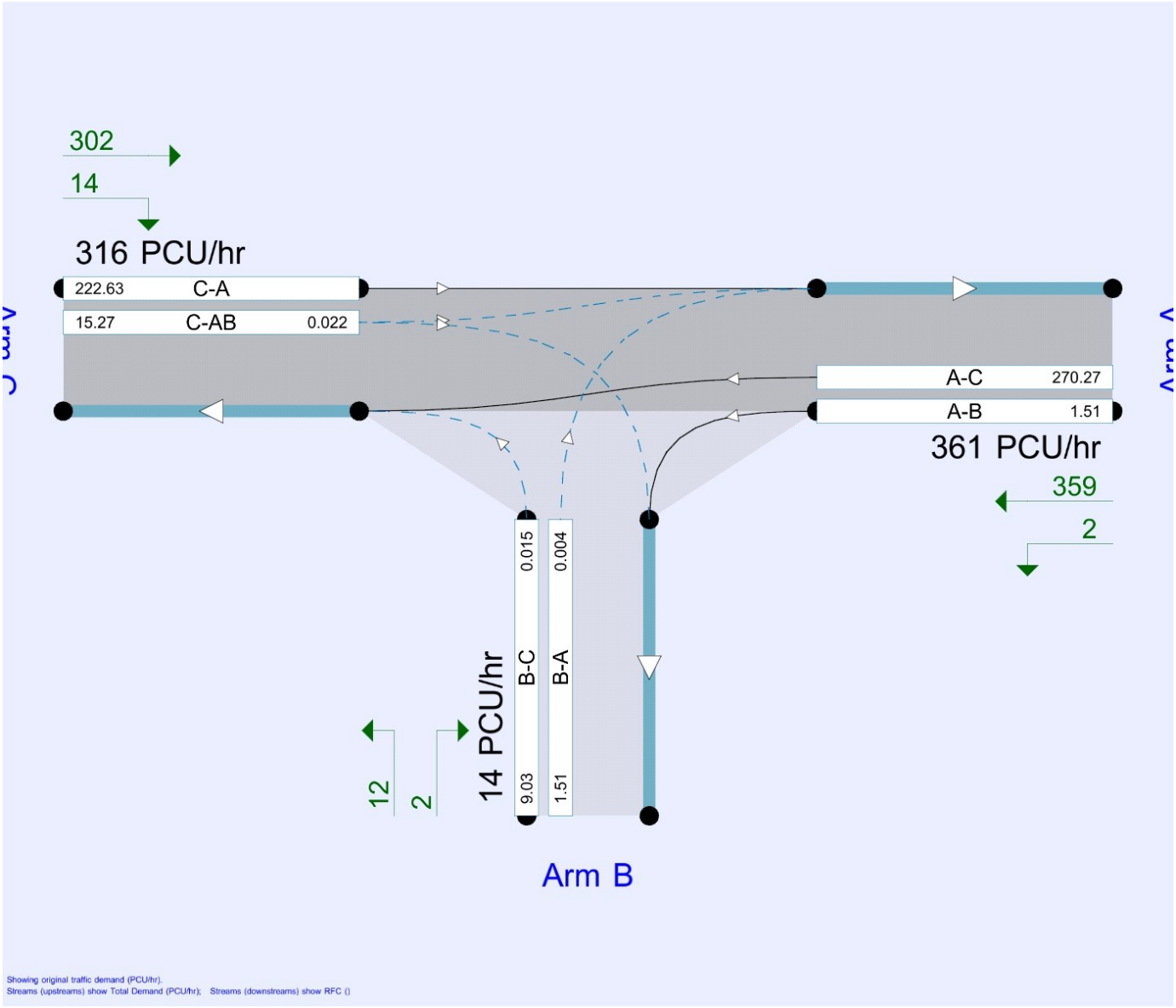

The junction diagram reflects the last run of Junctions.

Analysis Options

Vehicle length (m)	Calculate Queue Percentiles	Calculate detailed queueing delay	Calculate residual capacity	RFC Threshold	Average Delay threshold (s)	Queue threshold (PCU)
5.75				0.85	36.00	20.00

Demand Set Summary

Scenario name	Time Period name	Traffic profile type	Model start time (HH:mm)	Model finish time (HH:mm)	Time segment length (min)	Run automatically
Base 2031 + Dev	AM	ONE HOUR	07:45	09:15	15	✓
Base 2031 + Dev	PM	ONE HOUR	16:30	18:00	15	✓

J3 Ham Lane/Old Ham Lane - Base 2031 + Dev, AM

Data Errors and Warnings

No errors or warnings

Analysis Set Details

ID	Name	Include in report	Network flow scaling factor (%)	Network capacity scaling factor (%)
A1	J3 Ham Lane/Old Ham Lane	✓	100.000	100.000

Junction Network

Junctions

Junction	Name	Junction Type	Major road direction	Junction Delay (s)	Junction LOS
1	untitled	T-Junction	Two-way	0.28	A

Junction Network Options

Driving side	Lighting
Left	Normal/unknown

Arms

Arms

Arm	Name	Description	Arm type
A	Ham Lane S		Major
B	Old Ham Lane		Minor
C	Ham Lane N		Major

Major Arm Geometry

Arm	Width of carriageway (m)	Has kerbed central reserve	Has right turn bay	Visibility for right turn (m)	Blocks?	Blocking queue (PCU)
C	7.25			55.0	✓	0.00

Geometries for Arm C are measured opposite Arm B. Geometries for Arm A (if relevant) are measured opposite Arm D.

Minor Arm Geometry

Arm	Minor arm type	Width at give-way (m)	Width at 5m (m)	Width at 10m (m)	Width at 15m (m)	Width at 20m (m)	Estimate flare length	Flare length (PCU)	Visibility to left (m)	Visibility to right (m)
B	One lane plus flare	9.60	4.60	2.30	2.30	2.30		1.00	28	26

Slope / Intercept / Capacity

Priority Intersection Slopes and Intercepts

Junction	Stream	Intercept (PCU/hr)	Slope for A-B	Slope for A-C	Slope for C-A	Slope for C-B
1	B-A	511.794	0.088	0.223	0.140	0.318
1	B-C	635.251	0.092	0.233	-	-
1	C-B	605.814	0.222	0.222	-	-

The slopes and intercepts shown above do NOT include any corrections or adjustments.

Streams may be combined, in which case capacity will be adjusted.

Values are shown for the first time segment only; they may differ for subsequent time segments.

Traffic Demand

Demand Set Details

ID	Scenario name	Time Period name	Traffic profile type	Model start time (HH:mm)	Model finish time (HH:mm)	Time segment length (min)	Run automatically
D5	Base 2031 + Dev	AM	ONE HOUR	07:45	09:15	15	✓

Vehicle mix varies over turn	Vehicle mix varies over entry	Vehicle mix source	PCU Factor for a HV (PCU)
✓	✓	HV Percentages	2.00

Demand overview (Traffic)

Arm	Linked arm	Profile type	Use O-D data	Average Demand (PCU/hr)	Scaling Factor (%)
A		ONE HOUR	✓	248.00	100.000
B		ONE HOUR	✓	17.00	100.000
C		ONE HOUR	✓	383.00	100.000

Origin-Destination Data

Demand (PCU/hr)

		To		
		A	B	C
From	A	0.000	6.000	242.000
	B	7.000	0.000	10.000
	C	377.000	6.000	0.000

Proportions

		To		
		A	B	C
From	A	0.00	0.02	0.98
	B	0.41	0.00	0.59
	C	0.98	0.02	0.00

Vehicle Mix

Heavy Vehicle proportion

		To		
		A	B	C
From	A	0	7	12
	B	0	0	0
	C	8	0	0

Average PCU Per Veh

		To		
		A	B	C
From	A	1.000	1.065	1.120
	B	1.000	1.000	1.000
	C	1.080	1.000	1.000

Detailed Demand Data

Demand for each time segment

Time Segment	Arm	Demand (PCU/hr)	Demand in PCU (PCU/hr)
07:45-08:00	A	186.71	186.71
	B	12.80	12.80
	C	288.34	288.34
08:00-08:15	A	222.95	222.95
	B	15.28	15.28
	C	344.31	344.31
08:15-08:30	A	273.05	273.05
	B	18.72	18.72
	C	421.69	421.69
08:30-08:45	A	273.05	273.05
	B	18.72	18.72
	C	421.69	421.69
08:45-09:00	A	222.95	222.95
	B	15.28	15.28
	C	344.31	344.31
09:00-09:15	A	186.71	186.71
	B	12.80	12.80
	C	288.34	288.34

Results

Results Summary for whole modelled period

Stream	Max RFC	Max delay (s)	Max Queue (PCU)	Max LOS	Average Demand (PCU/hr)	Total Junction Arrivals (PCU)
B-C	0.02	6.44	0.0	A	9.18	13.76
B-A	0.02	9.38	0.0	A	6.42	9.63
C-AB	0.01	4.95	0.0	A	9.45	14.18
C-A					342.00	513.00
A-B					5.51	8.26
A-C					222.06	333.10

Main Results for each time segment

Main results: (07:45-08:00)

Stream	Total Demand (PCU/hr)	Junction demand (PCU/hr)	Junction Arrivals (PCU)	Bypass demand (PCU/hr)	Capacity (PCU/hr)	RFC	Throughput (PCU/hr)	Start queue (PCU)	End queue (PCU)	Delay (s)	LOS
B-C	7.53	7.53	1.88	0.00	590.61	0.013	7.48	0.0	0.0	6.173	A
B-A	5.27	5.27	1.32	0.00	429.58	0.012	5.22	0.0	0.0	8.482	A
C-AB	7.00	7.00	1.75	0.00	755.11	0.009	6.96	0.0	0.0	4.941	A
C-A	281.35	281.35	70.34	0.00			281.35				
A-B	4.52	4.52	1.13	0.00			4.52				
A-C	182.19	182.19	45.55	0.00			182.19				

Main results: (08:00-08:15)

Stream	Total Demand (PCU/hr)	Junction demand (PCU/hr)	Junction Arrivals (PCU)	Bypass demand (PCU/hr)	Capacity (PCU/hr)	RFC	Throughput (PCU/hr)	Start queue (PCU)	End queue (PCU)	Delay (s)	LOS
B-C	8.99	8.99	2.25	0.00	581.85	0.015	8.98	0.0	0.0	6.283	A
B-A	6.29	6.29	1.57	0.00	413.66	0.015	6.28	0.0	0.0	8.836	A
C-AB	9.05	9.05	2.26	0.00	783.72	0.012	9.04	0.0	0.0	4.782	A
C-A	335.26	335.26	83.82	0.00			335.26				
A-B	5.39	5.39	1.35	0.00			5.39				
A-C	217.55	217.55	54.39	0.00			217.55				

Main results: (08:15-08:30)

Stream	Total Demand (PCU/hr)	Junction demand (PCU/hr)	Junction Arrivals (PCU)	Bypass demand (PCU/hr)	Capacity (PCU/hr)	RFC	Throughput (PCU/hr)	Start queue (PCU)	End queue (PCU)	Delay (s)	LOS
B-C	11.01	11.01	2.75	0.00	569.76	0.019	10.99	0.0	0.0	6.442	A
B-A	7.71	7.71	1.93	0.00	391.59	0.020	7.69	0.0	0.0	9.377	A
C-AB	12.29	12.29	3.07	0.00	822.59	0.015	12.27	0.0	0.0	4.591	A
C-A	409.40	409.40	102.35	0.00			409.40				
A-B	6.61	6.61	1.65	0.00			6.61				
A-C	266.45	266.45	66.61	0.00			266.45				

Main results: (08:30-08:45)

Stream	Total Demand (PCU/hr)	Junction demand (PCU/hr)	Junction Arrivals (PCU)	Bypass demand (PCU/hr)	Capacity (PCU/hr)	RFC	Throughput (PCU/hr)	Start queue (PCU)	End queue (PCU)	Delay (s)	LOS
B-C	11.01	11.01	2.75	0.00	569.74	0.019	11.01	0.0	0.0	6.442	A
B-A	7.71	7.71	1.93	0.00	391.61	0.020	7.71	0.0	0.0	9.376	A
C-AB	12.30	12.30	3.07	0.00	822.60	0.015	12.30	0.0	0.0	4.601	A
C-A	409.39	409.39	102.35	0.00			409.39				
A-B	6.61	6.61	1.65	0.00			6.61				
A-C	266.45	266.45	66.61	0.00			266.45				

Main results: (08:45-09:00)

Stream	Total Demand (PCU/hr)	Junction demand (PCU/hr)	Junction Arrivals (PCU)	Bypass demand (PCU/hr)	Capacity (PCU/hr)	RFC	Throughput (PCU/hr)	Start queue (PCU)	End queue (PCU)	Delay (s)	LOS
B-C	8.99	8.99	2.25	0.00	581.82	0.015	9.01	0.0	0.0	6.284	A
B-A	6.29	6.29	1.57	0.00	413.70	0.015	6.31	0.0	0.0	8.836	A
C-AB	9.05	9.05	2.26	0.00	783.73	0.012	9.07	0.0	0.0	4.802	A
C-A	335.25	335.25	83.81	0.00			335.25				
A-B	5.39	5.39	1.35	0.00			5.39				
A-C	217.55	217.55	54.39	0.00			217.55				

Main results: (09:00-09:15)

Stream	Total Demand (PCU/hr)	Junction demand (PCU/hr)	Junction Arrivals (PCU)	Bypass demand (PCU/hr)	Capacity (PCU/hr)	RFC	Throughput (PCU/hr)	Start queue (PCU)	End queue (PCU)	Delay (s)	LOS
B-C	7.53	7.53	1.88	0.00	590.55	0.013	7.54	0.0	0.0	6.174	A
B-A	5.27	5.27	1.32	0.00	429.65	0.012	5.28	0.0	0.0	8.483	A
C-AB	7.01	7.01	1.75	0.00	755.12	0.009	7.03	0.0	0.0	4.954	A
C-A	281.33	281.33	70.33	0.00			281.33				
A-B	4.52	4.52	1.13	0.00			4.52				
A-C	182.19	182.19	45.55	0.00			182.19				

J3 Ham Lane/Old Ham Lane - Base 2031 + Dev, PM

Data Errors and Warnings

No errors or warnings

Analysis Set Details

ID	Name	Include in report	Network flow scaling factor (%)	Network capacity scaling factor (%)
A1	J3 Ham Lane/Old Ham Lane	✓	100.000	100.000

Junction Network

Junctions

Junction	Name	Junction Type	Major road direction	Junction Delay (s)	Junction LOS
1	untitled	T-Junction	Two-way	0.32	A

Junction Network Options

[same as above]

Arms

Arms

[same as above]

Major Arm Geometry

[same as above]

Minor Arm Geometry

[same as above]

Slope / Intercept / Capacity

[same as above]

Traffic Demand

Demand Set Details

ID	Scenario name	Time Period name	Traffic profile type	Model start time (HH:mm)	Model finish time (HH:mm)	Time segment length (min)	Run automatically
D6	Base 2031 + Dev	PM	ONE HOUR	16:30	18:00	15	✓

Vehicle mix varies over turn	Vehicle mix varies over entry	Vehicle mix source	PCU Factor for a HV (PCU)
✓	✓	HV Percentages	2.00

Demand overview (Traffic)

Arm	Linked arm	Profile type	Use O-D data	Average Demand (PCU/hr)	Scaling Factor (%)
A		ONE HOUR	✓	361.00	100.000
B		ONE HOUR	✓	14.00	100.000
C		ONE HOUR	✓	316.00	100.000

Origin-Destination Data

Demand (PCU/hr)

		To		
		A	B	C
From	A	0.000	2.000	359.000
	B	2.000	0.000	12.000
	C	302.000	14.000	0.000

Proportions

		To		
		A	B	C
From	A	0.00	0.01	0.99
	B	0.14	0.00	0.86
	C	0.96	0.04	0.00

Vehicle Mix

Heavy Vehicle proportion

		To		
		A	B	C
From	A	0	0	2
	B	0	0	0
	C	13	0	0

Average PCU Per Veh

		To		
		A	B	C
From	A	1.000	1.000	1.020
	B	1.000	1.000	1.000
	C	1.130	1.000	1.000

Detailed Demand Data

Demand for each time segment

Time Segment	Arm	Demand (PCU/hr)	Demand in PCU (PCU/hr)
16:30-16:45	A	271.78	271.78
	B	10.54	10.54
	C	237.90	237.90
16:45-17:00	A	324.53	324.53
	B	12.59	12.59
	C	284.08	284.08
17:00-17:15	A	397.47	397.47
	B	15.41	15.41
	C	347.92	347.92
17:15-17:30	A	397.47	397.47
	B	15.41	15.41
	C	347.92	347.92
17:30-17:45	A	324.53	324.53
	B	12.59	12.59
	C	284.08	284.08
17:45-18:00	A	271.78	271.78
	B	10.54	10.54
	C	237.90	237.90

Results

Results Summary for whole modelled period

Stream	Max RFC	Max delay (s)	Max Queue (PCU)	Max LOS	Average Demand (PCU/hr)	Total Junction Arrivals (PCU)
B-C	0.02	6.63	0.0	A	11.01	16.52
B-A	0.01	10.36	0.0	B	1.84	2.75
C-AB	0.04	5.46	0.1	A	20.46	30.69
C-A					269.51	404.26
A-B					1.84	2.75
A-C					329.42	494.14

Main Results for each time segment

Main results: (16:30-16:45)

Stream	Total Demand (PCU/hr)	Junction demand (PCU/hr)	Junction Arrivals (PCU)	Bypass demand (PCU/hr)	Capacity (PCU/hr)	RFC	Throughput (PCU/hr)	Start queue (PCU)	End queue (PCU)	Delay (s)	LOS
B-C	9.03	9.03	2.26	0.00	585.93	0.015	8.97	0.0	0.0	6.239	A
B-A	1.51	1.51	0.38	0.00	391.07	0.004	1.49	0.0	0.0	9.240	A
C-AB	15.27	15.27	3.82	0.00	701.74	0.022	15.16	0.0	0.0	5.437	A
C-A	222.63	222.63	55.66	0.00			222.63				
A-B	1.51	1.51	0.38	0.00			1.51				
A-C	270.27	270.27	67.57	0.00			270.27				

Main results: (16:45-17:00)

Stream	Total Demand (PCU/hr)	Junction demand (PCU/hr)	Junction Arrivals (PCU)	Bypass demand (PCU/hr)	Capacity (PCU/hr)	RFC	Throughput (PCU/hr)	Start queue (PCU)	End queue (PCU)	Delay (s)	LOS
B-C	10.79	10.79	2.70	0.00	573.24	0.019	10.77	0.0	0.0	6.399	A
B-A	1.80	1.80	0.45	0.00	373.64	0.005	1.79	0.0	0.0	9.681	A
C-AB	19.61	19.61	4.90	0.00	721.08	0.027	19.57	0.0	0.0	5.338	A
C-A	264.47	264.47	66.12	0.00			264.47				
A-B	1.80	1.80	0.45	0.00			1.80				
A-C	322.73	322.73	80.68	0.00			322.73				

Main results: (17:00-17:15)

Stream	Total Demand (PCU/hr)	Junction demand (PCU/hr)	Junction Arrivals (PCU)	Bypass demand (PCU/hr)	Capacity (PCU/hr)	RFC	Throughput (PCU/hr)	Start queue (PCU)	End queue (PCU)	Delay (s)	LOS
B-C	13.21	13.21	3.30	0.00	555.71	0.024	13.19	0.0	0.0	6.635	A
B-A	2.20	2.20	0.55	0.00	349.53	0.006	2.20	0.0	0.0	10.364	B
C-AB	26.45	26.45	6.61	0.00	747.89	0.035	26.39	0.0	0.1	5.224	A
C-A	321.47	321.47	80.37	0.00			321.47				
A-B	2.20	2.20	0.55	0.00			2.20				
A-C	395.27	395.27	98.82	0.00			395.27				

Main results: (17:15-17:30)

Stream	Total Demand (PCU/hr)	Junction demand (PCU/hr)	Junction Arrivals (PCU)	Bypass demand (PCU/hr)	Capacity (PCU/hr)	RFC	Throughput (PCU/hr)	Start queue (PCU)	End queue (PCU)	Delay (s)	LOS
B-C	13.21	13.21	3.30	0.00	555.70	0.024	13.21	0.0	0.0	6.635	A
B-A	2.20	2.20	0.55	0.00	349.53	0.006	2.20	0.0	0.0	10.364	B
C-AB	26.47	26.47	6.62	0.00	747.91	0.035	26.47	0.0	0.1	5.241	A
C-A	321.45	321.45	80.36	0.00			321.45				
A-B	2.20	2.20	0.55	0.00			2.20				
A-C	395.27	395.27	98.82	0.00			395.27				

Main results: (17:30-17:45)

Stream	Total Demand (PCU/hr)	Junction demand (PCU/hr)	Junction Arrivals (PCU)	Bypass demand (PCU/hr)	Capacity (PCU/hr)	RFC	Throughput (PCU/hr)	Start queue (PCU)	End queue (PCU)	Delay (s)	LOS
B-C	10.79	10.79	2.70	0.00	573.22	0.019	10.81	0.0	0.0	6.402	A
B-A	1.80	1.80	0.45	0.00	373.65	0.005	1.80	0.0	0.0	9.683	A
C-AB	19.63	19.63	4.91	0.00	721.12	0.027	19.69	0.1	0.0	5.378	A
C-A	264.45	264.45	66.11	0.00			264.45				
A-B	1.80	1.80	0.45	0.00			1.80				
A-C	322.73	322.73	80.68	0.00			322.73				

Main results: (17:45-18:00)

Stream	Total Demand (PCU/hr)	Junction demand (PCU/hr)	Junction Arrivals (PCU)	Bypass demand (PCU/hr)	Capacity (PCU/hr)	RFC	Throughput (PCU/hr)	Start queue (PCU)	End queue (PCU)	Delay (s)	LOS
B-C	9.03	9.03	2.26	0.00	585.89	0.015	9.05	0.0	0.0	6.240	A
B-A	1.51	1.51	0.38	0.00	391.08	0.004	1.51	0.0	0.0	9.240	A
C-AB	15.31	15.31	3.83	0.00	701.77	0.022	15.35	0.0	0.0	5.459	A
C-A	222.59	222.59	55.65	0.00			222.59				
A-B	1.51	1.51	0.38	0.00			1.51				
A-C	270.27	270.27	67.57	0.00			270.27				

Junctions 9

PICADY 9 - Priority Intersection Module

Version: 9.0.0.4211 []
© Copyright TRL Limited, 2015

For sales and distribution information, program advice and maintenance, contact TRL:
Tel: +44 (0)1344 770758 email: software@trl.co.uk Web: http://www.trlsoftware.co.uk

The users of this computer program for the solution of an engineering problem are in no way relieved of their responsibility for the correctness of the solution

Filename: J4 Faversham Road Old Ashford Road High Street Maidstone Road.j9
Path: P:\Southampton\ITW\Projects\347826 - Maidstone BC Jct Assessment\AD. Lenham\PICADY models for Addendum\J4 Faversham Road Old Ashford Road High Street Maidstone Road
Report generation date: 06/08/2015 09:02:12

»J4 Faversham Road/Old Ashford Road/High Street/Maidstone Road - Base 2031 + Dev, AM
»J4 Faversham Road/Old Ashford Road/High Street/Maidstone Road - Base 2031 + Dev, PM

Summary of junction performance

	AM				PM			
	Queue (PCU)	Delay (s)	RFC	LOS	Queue (PCU)	Delay (s)	RFC	LOS
	J4 Faversham Road / Old Ashford Road / High Street / Maidstone Road - Base 2031 + Dev							
Stream B-ACD	427.4	3224.20	2.04	F	126.6	1018.82	1.49	F
Stream A-BCD	0.0	5.78	0.02	A	0.1	5.89	0.05	A
Stream A-B								
Stream A-C								
Stream D-AB	72.3	0.00	9999999999.00	A	2.0	40.35	0.69	E
Stream D-BC	21.7	0.00	9999999999.00	A	2.2	56.78	0.72	F
Stream C-ABD	1.3	11.87	0.53	B	3.7	23.67	0.77	C
Stream C-D								
Stream C-A								

Values shown are the highest values encountered over all time segments. Delay is the maximum value of average delay per arriving vehicle.

File summary

File Description

Title	(untitled)
Location	
Site number	
Date	30/06/2015
Version	
Status	(new file)
Identifier	
Client	
Jobnumber	
Enumerator	MOTTMAC"rap67683
Description	

Units

Distance units	Speed units	Traffic units input	Traffic units results	Flow units	Average delay units	Total delay units	Rate of delay units
m	kph	PCU	PCU	perHour	s	-Min	perMin

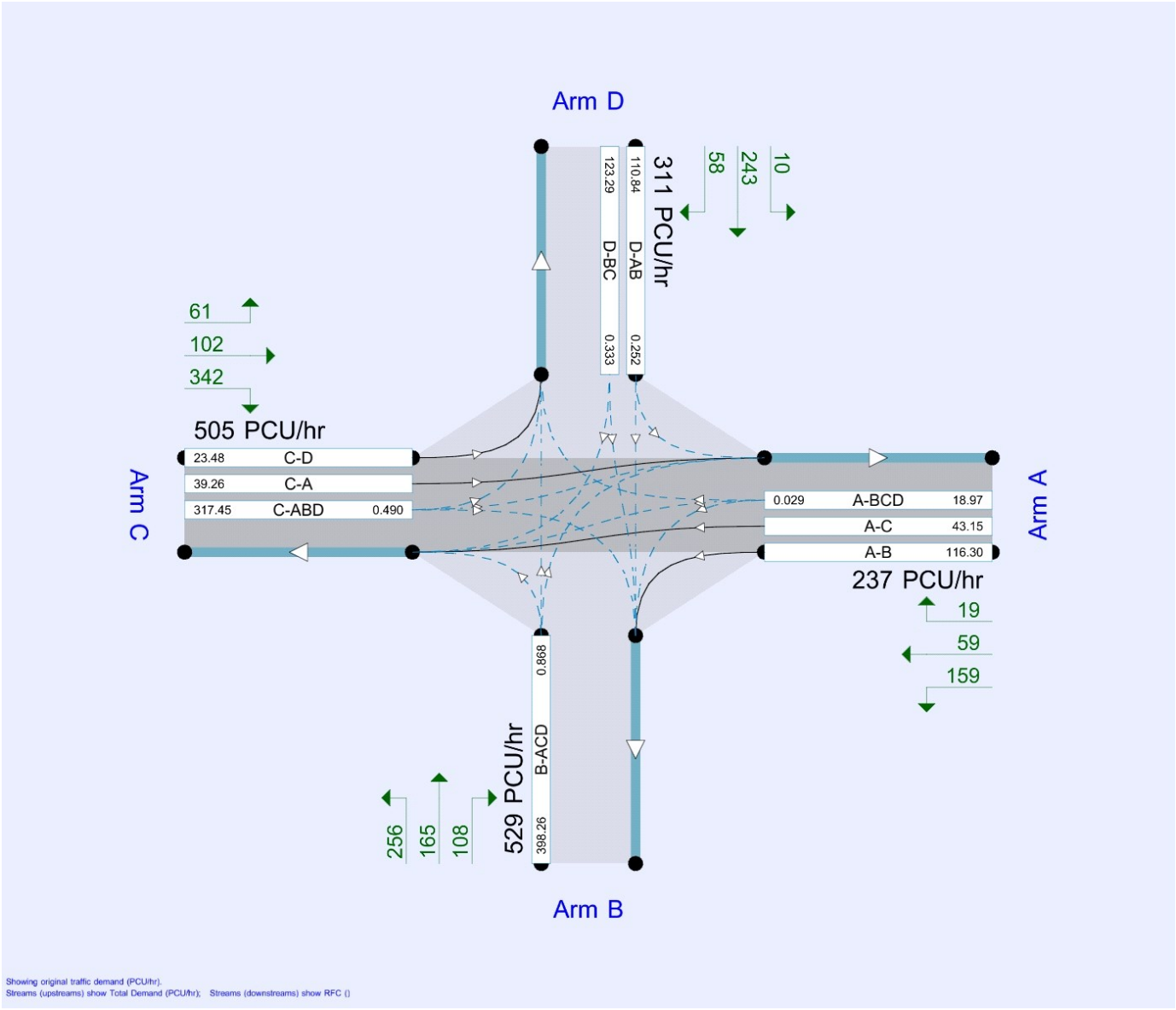

The junction diagram reflects the last run of Junctions.

Analysis Options

Vehicle length (m)	Calculate Queue Percentiles	Calculate detailed queueing delay	Calculate residual capacity	RFC Threshold	Average Delay threshold (s)	Queue threshold (PCU)
5.75				0.85	36.00	20.00

Demand Set Summary

Scenario name	Time Period name	Traffic profile type	Model start time (HH:mm)	Model finish time (HH:mm)	Time segment length (min)	Run automatically
Base 2031 + Dev	AM	ONE HOUR	08:00	09:30	15	✓
Base 2031 + Dev	PM	ONE HOUR	16:15	17:45	15	✓

J4 Faversham Road/Old Ashford Road/High Street/Maidstone Road - Base 2031 + Dev, AM

Data Errors and Warnings

No errors or warnings

Analysis Set Details

ID	Name	Include in report	Network flow scaling factor (%)	Network capacity scaling factor (%)
A1	J4 Faversham Road/Old Ashford Road/High Street/Maidstone Road	✓	100.000	100.000

Junction Network

Junctions

Junction	Name	Junction Type	Major road direction	Junction Delay (s)	Junction LOS
1	untitled	Crossroads	Two-way	1663.31	F

Junction Network Options

Driving side	Lighting
Left	Normal/unknown

Arms

Arms

Arm	Name	Description	Arm type
A	Faversham Road N		Major
B	Old Ashford Road E		Minor
C	High Street S		Major
D	Maidstone Road W		Minor

Major Arm Geometry

Arm	Width of carriageway (m)	Has kerbed central reserve	Has right turn bay	Visibility for right turn (m)	Blocks?	Blocking queue (PCU)
A	6.10			142.0	✓	0.00
C	6.10			58.0	✓	0.00

Geometries for Arm C are measured opposite Arm B. Geometries for Arm A (if relevant) are measured opposite Arm D.

Minor Arm Geometry

Arm	Minor arm type	Lane width (m)	Width at give-way (m)	Width at 5m (m)	Width at 10m (m)	Width at 15m (m)	Width at 20m (m)	Estimate flare length	Flare length (PCU)	Visibility to left (m)	Visibility to right (m)
B	One lane	3.16								26	36
D	One lane plus flare		10.00	2.50	2.50	2.50	2.50		1.00	95	18

Slope / Intercept / Capacity

Priority Intersection Slopes and Intercepts

Junction	Stream	Intercept (PCU/hr)	Slope for A-B	Slope for A-C	Slope for A-D	Slope for B-A	Slope for B-C	Slope for B-D	Slope for C-A	Slope for C-B	Slope for C-D	Slope for D-A	Slope for D-B	Slope for D-C
1	A-D	656.197	-	-	-	-	-	-	0.253	0.362	0.253	-	-	-
1	B-A	511.767	0.093	0.235	0.235	-	-	-	0.148	0.335	-	0.235	0.235	0.117
1	B-C	656.957	0.100	0.253	-	-	-	-	-	-	-	-	-	-
1	B-D, nearside lane	511.767	0.093	0.235	0.235	-	-	-	0.148	0.335	0.148	-	-	-
1	B-D, offside lane	511.767	0.093	0.235	0.235	-	-	-	0.148	0.335	0.148	-	-	-
1	C-B	607.552	0.234	0.234	0.335	-	-	-	-	-	-	-	-	-
1	D-A	762.471	-	-	-	-	-	-	0.294	-	0.116	-	-	-
1	D-B, nearside lane	620.527	0.179	0.179	0.406	-	-	-	0.284	0.284	0.113	-	-	-
1	D-B, offside lane	517.005	0.149	0.149	0.339	-	-	-	0.237	0.237	0.094	-	-	-
1	D-C	517.005	-	0.149	0.339	0.118	0.237	0.237	0.237	0.237	0.094	-	-	-

The slopes and intercepts shown above do NOT include any corrections or adjustments.

Streams may be combined, in which case capacity will be adjusted.

Values are shown for the first time segment only; they may differ for subsequent time segments.

Traffic Demand

Demand Set Details

ID	Scenario name	Time Period name	Traffic profile type	Model start time (HH:mm)	Model finish time (HH:mm)	Time segment length (min)	Run automatically
D5	Base 2031 + Dev	AM	ONE HOUR	08:00	09:30	15	✓

Vehicle mix varies over turn	Vehicle mix varies over entry	Vehicle mix source	PCU Factor for a HV (PCU)
✓	✓	HV Percentages	2.00

Demand overview (Traffic)

Arm	Linked arm	Profile type	Use O-D data	Average Demand (PCU/hr)	Scaling Factor (%)
A		ONE HOUR	✓	170.00	100.000
B		ONE HOUR	✓	800.00	100.000
C		ONE HOUR	✓	386.00	100.000
D		ONE HOUR	✓	197.00	100.000

Origin-Destination Data

Demand (PCU/hr)

		To			
		A	B	C	D
From	A	0.000	78.000	82.000	10.000
	B	187.000	0.000	347.000	266.000
	C	88.000	248.000	0.000	50.000
	D	19.000	134.000	44.000	0.000

Proportions

		To			
		A	B	C	D
From	A	0.00	0.46	0.48	0.06
	B	0.23	0.00	0.43	0.33
	C	0.23	0.64	0.00	0.13
	D	0.10	0.68	0.22	0.00

Vehicle Mix

Heavy Vehicle proportion

		To			
		A	B	C	D
From	A	0	0	5	0
	B	6	0	0	0
	C	7	2	0	4
	D	20	3	0	0

Average PCU Per Veh

		To			
		A	B	C	D
From	A	1.000	1.000	1.050	1.000
	B	1.060	1.000	1.000	1.000
	C	1.070	1.020	1.000	1.040
	D	1.200	1.028	1.000	1.000

Detailed Demand Data

Demand for each time segment

Time Segment	Arm	Demand (PCU/hr)	Demand in PCU (PCU/hr)
08:00-08:15	A	127.98	127.98
	B	602.28	602.28
	C	290.60	290.60
	D	148.31	148.31
08:15-08:30	A	152.83	152.83
	B	719.18	719.18
	C	347.01	347.01
	D	177.10	177.10
08:30-08:45	A	187.17	187.17
	B	880.82	880.82
	C	424.99	424.99
	D	216.90	216.90
08:45-09:00	A	187.17	187.17
	B	880.82	880.82
	C	424.99	424.99
	D	216.90	216.90
09:00-09:15	A	152.83	152.83
	B	719.18	719.18
	C	347.01	347.01
	D	177.10	177.10
09:15-09:30	A	127.98	127.98
	B	602.28	602.28
	C	290.60	290.60
	D	148.31	148.31

Results

Results Summary for whole modelled period

Stream	Max RFC	Max delay (s)	Max Queue (PCU)	Max LOS	Average Demand (PCU/hr)	Total Junction Arrivals (PCU)
B-ACD	2.04	3224.20	427.4	F	734.09	1101.14
A-BCD	0.02	5.78	0.0	A	11.92	17.88
A-B					70.24	105.36
A-C					73.84	110.76
D-AB	9999999999.00	0.00	72.3	A	116.53	174.80
D-BC	9999999999.00	0.00	21.7	A	64.24	96.36
C-ABD	0.53	11.87	1.3	B	284.22	426.33
C-D					25.36	38.03
C-A					44.63	66.94

Main Results for each time segment

Main results: (08:00-08:15)

Stream	Total Demand (PCU/hr)	Junction demand (PCU/hr)	Junction Arrivals (PCU)	Bypass demand (PCU/hr)	Capacity (PCU/hr)	RFC	Throughput (PCU/hr)	Start queue (PCU)	End queue (PCU)	Delay (s)	LOS
B-ACD	602.28	602.28	150.57	0.00	477.64	1.261	464.04	0.0	34.6	149.531	F
A-BCD	9.21	9.21	2.30	0.00	644.85	0.014	9.15	0.0	0.0	5.688	A
A-B	57.90	57.90	14.48	0.00			57.90				
A-C	60.87	60.87	15.22	0.00			60.87				
D-AB	70.04	70.04	17.51	0.00	519.19	0.135	69.38	0.0	0.2	0.000	A
D-BC	78.27	78.27	19.57	0.00	372.67	0.210	77.21	0.0	0.3	0.000	A
C-ABD	222.35	222.35	55.59	0.00	647.39	0.343	219.96	0.0	0.6	8.606	A
C-D	24.73	24.73	6.18	0.00			24.73				
C-A	43.52	43.52	10.88	0.00			43.52				

Main results: (08:15-08:30)

Stream	Total Demand (PCU/hr)	Junction demand (PCU/hr)	Junction Arrivals (PCU)	Bypass demand (PCU/hr)	Capacity (PCU/hr)	RFC	Throughput (PCU/hr)	Start queue (PCU)	End queue (PCU)	Delay (s)	LOS
B-ACD	719.18	719.18	179.80	0.00	458.34	1.569	458.01	34.6	99.9	556.108	F
A-BCD	11.51	11.51	2.88	0.00	643.18	0.018	11.49	0.0	0.0	5.726	A
A-B	68.89	68.89	17.22	0.00			68.89				
A-C	72.43	72.43	18.11	0.00			72.43				
D-AB	87.06	87.06	21.77	0.00	483.15	0.180	86.80	0.2	0.2	0.000	A
D-BC	90.04	90.04	22.51	0.00	317.02	0.284	89.53	0.3	0.4	0.000	A
C-ABD	275.37	275.37	68.84	0.00	655.76	0.420	274.42	0.6	0.8	9.685	A
C-D	25.96	25.96	6.49	0.00			25.96				
C-A	45.68	45.68	11.42	0.00			45.68				

Main results: (08:30-08:45)

Stream	Total Demand (PCU/hr)	Junction demand (PCU/hr)	Junction Arrivals (PCU)	Bypass demand (PCU/hr)	Capacity (PCU/hr)	RFC	Throughput (PCU/hr)	Start queue (PCU)	End queue (PCU)	Delay (s)	LOS
B-ACD	880.82	880.82	220.20	0.00	431.43	2.042	431.39	99.9	212.2	1304.377	F
A-BCD	15.02	15.02	3.75	0.00	642.26	0.023	14.98	0.0	0.0	5.773	A
A-B	83.93	83.93	20.98	0.00			83.93				
A-C	88.23	88.23	22.06	0.00			88.23				
D-AB	120.90	120.90	30.23	0.00	394.80	0.306	120.00	0.2	0.5	0.000	A
D-BC	96.00	96.00	24.00	0.00	196.42	0.489	93.96	0.4	0.9	0.000	A
C-ABD	354.18	354.18	88.55	0.00	667.38	0.531	352.26	0.8	1.3	11.717	B
C-D	25.66	25.66	6.41	0.00			25.66				
C-A	45.15	45.15	11.29	0.00			45.15				

Main results: (08:45-09:00)

Stream	Total Demand (PCU/hr)	Junction demand (PCU/hr)	Junction Arrivals (PCU)	Bypass demand (PCU/hr)	Capacity (PCU/hr)	RFC	Throughput (PCU/hr)	Start queue (PCU)	End queue (PCU)	Delay (s)	LOS
B-ACD	880.82	880.82	220.20	0.00	430.74	2.045	430.73	212.2	324.7	2253.930	F
A-BCD	15.03	15.03	3.76	0.00	641.70	0.023	15.03	0.0	0.0	5.784	A
A-B	83.92	83.92	20.98	0.00			83.92				
A-C	88.23	88.23	22.06	0.00			88.23				
D-AB	168.46	168.46	42.11	0.00	131.90	1.277	122.14	0.5	12.0	0.000	A
D-BC	48.44	48.44	12.11	0.00	40.33	1.201	34.32	0.9	4.4	0.000	A
C-ABD	354.61	354.61	88.65	0.00	667.77	0.531	354.52	1.3	1.3	11.870	B
C-D	25.50	25.50	6.38	0.00			25.50				
C-A	44.88	44.88	11.22	0.00			44.88				

Main results: (09:00-09:15)

Stream	Total Demand (PCU/hr)	Junction demand (PCU/hr)	Junction Arrivals (PCU)	Bypass demand (PCU/hr)	Capacity (PCU/hr)	RFC	Throughput (PCU/hr)	Start queue (PCU)	End queue (PCU)	Delay (s)	LOS
B-ACD	719.18	719.18	179.80	0.00	452.63	1.589	452.62	324.7	391.4	2832.618	F
A-BCD	11.52	11.52	2.88	0.00	642.29	0.018	11.55	0.0	0.0	5.744	A
A-B	68.89	68.89	17.22	0.00			68.89				
A-C	72.42	72.42	18.10	0.00			72.42				
D-AB	137.54	137.54	34.39	0.00	11.61	11.845	11.59	12.0	43.5	0.000	A
D-BC	39.56	39.56	9.89	0.00	3.58	11.039	3.53	4.4	13.4	0.000	A
C-ABD	275.89	275.89	68.97	0.00	656.33	0.420	277.74	1.3	0.9	9.851	A
C-D	25.77	25.77	6.44	0.00			25.77				
C-A	45.35	45.35	11.34	0.00			45.35				

Main results: (09:15-09:30)

Stream	Total Demand (PCU/hr)	Junction demand (PCU/hr)	Junction Arrivals (PCU)	Bypass demand (PCU/hr)	Capacity (PCU/hr)	RFC	Throughput (PCU/hr)	Start queue (PCU)	End queue (PCU)	Delay (s)	LOS
B-ACD	602.28	602.28	150.57	0.00	458.37	1.314	458.35	391.4	427.4	3224.202	F
A-BCD	9.23	9.23	2.31	0.00	643.75	0.014	9.25	0.0	0.0	5.704	A
A-B	57.89	57.89	14.47	0.00			57.89				
A-C	60.86	60.86	15.22	0.00			60.86				
D-AB	115.19	115.19	28.80	0.00	0.00	9999999999.000	0.00	43.5	72.3	0.000	A
D-BC	33.13	33.13	8.28	0.00	0.00	9999999999.000	0.00	13.4	21.7	0.000	A
C-ABD	222.91	222.91	55.73	0.00	647.82	0.344	223.93	0.9	0.6	8.755	A
C-D	24.53	24.53	6.13	0.00			24.53				
C-A	43.17	43.17	10.79	0.00			43.17				

J4 Faversham Road/Old Ashford Road/High Street/Maidstone Road - Base 2031 + Dev, PM

Data Errors and Warnings

No errors or warnings

Analysis Set Details

ID	Name	Include in report	Network flow scaling factor (%)	Network capacity scaling factor (%)
A1	J4 Faversham Road/Old Ashford Road/High Street/Maidstone Road	✓	100.000	100.000

Junction Network

Junctions

Junction	Name	Junction Type	Major road direction	Junction Delay (s)	Junction LOS
1	untitled	Crossroads	Two-way	356.97	F

Junction Network Options

[same as above]

Arms

Arms

[same as above]

Major Arm Geometry

[same as above]

Minor Arm Geometry

[same as above]

Slope / Intercept / Capacity

[same as above]

Traffic Demand

Demand Set Details

ID	Scenario name	Time Period name	Traffic profile type	Model start time (HH:mm)	Model finish time (HH:mm)	Time segment length (min)	Run automatically
D6	Base 2031 + Dev	PM	ONE HOUR	16:15	17:45	15	✓

Vehicle mix varies over turn	Vehicle mix varies over entry	Vehicle mix source	PCU Factor for a HV (PCU)
✓	✓	HV Percentages	2.00

Demand overview (Traffic)

Arm	Linked arm	Profile type	Use O-D data	Average Demand (PCU/hr)	Scaling Factor (%)
A		ONE HOUR	✓	237.00	100.000
B		ONE HOUR	✓	529.00	100.000
C		ONE HOUR	✓	505.00	100.000
D		ONE HOUR	✓	311.00	100.000

Origin-Destination Data

Demand (PCU/hr)

		To			
		A	B	C	D
From	A	0.000	159.000	59.000	19.000
	B	108.000	0.000	256.000	165.000
	C	102.000	342.000	0.000	61.000
	D	10.000	243.000	58.000	0.000

Proportions

		To			
		A	B	C	D
From	A	0.00	0.67	0.25	0.08
	B	0.20	0.00	0.48	0.31
	C	0.20	0.68	0.00	0.12
	D	0.03	0.78	0.19	0.00

Vehicle Mix

Heavy Vehicle proportion

		To			
		A	B	C	D
From	A	0	0	0	0
	B	0	0	1	0
	C	0	1	0	0
	D	0	2	3	0

Average PCU Per Veh

		To			
		A	B	C	D
From	A	1.000	1.000	1.000	1.000
	B	1.000	1.000	1.008	1.000
	C	1.000	1.008	1.000	1.000
	D	1.000	1.020	1.030	1.000

Detailed Demand Data

Demand for each time segment

Time Segment	Arm	Demand (PCU/hr)	Demand in PCU (PCU/hr)
16:15-16:30	A	178.43	178.43
	B	398.26	398.26
	C	380.19	380.19
	D	234.14	234.14
16:30-16:45	A	213.06	213.06
	B	475.56	475.56
	C	453.98	453.98
	D	279.58	279.58
16:45-17:00	A	260.94	260.94
	B	582.44	582.44
	C	556.02	556.02
	D	342.42	342.42
17:00-17:15	A	260.94	260.94
	B	582.44	582.44
	C	556.02	556.02
	D	342.42	342.42
17:15-17:30	A	213.06	213.06
	B	475.56	475.56
	C	453.98	453.98
	D	279.58	279.58
17:30-17:45	A	178.43	178.43
	B	398.26	398.26
	C	380.19	380.19
	D	234.14	234.14

Results

Results Summary for whole modelled period

Stream	Max RFC	Max delay (s)	Max Queue (PCU)	Max LOS	Average Demand (PCU/hr)	Total Junction Arrivals (PCU)
B-ACD	1.49	1018.82	126.6	F	485.42	728.13
A-BCD	0.05	5.89	0.1	A	25.28	37.92
A-B					140.18	210.27
A-C					52.02	78.02
D-AB	0.69	40.35	2.0	E	147.73	221.59
D-BC	0.72	56.78	2.2	F	137.65	206.48
C-ABD	0.77	23.67	3.7	C	410.90	616.36
C-D					19.64	29.47
C-A					32.85	49.27

Main Results for each time segment

Main results: (16:15-16:30)

Stream	Total Demand (PCU/hr)	Junction demand (PCU/hr)	Junction Arrivals (PCU)	Bypass demand (PCU/hr)	Capacity (PCU/hr)	RFC	Throughput (PCU/hr)	Start queue (PCU)	End queue (PCU)	Delay (s)	LOS
B-ACD	398.26	398.26	99.56	0.00	458.60	0.868	379.11	0.0	4.8	39.178	E
A-BCD	18.97	18.97	4.74	0.00	646.76	0.029	18.82	0.0	0.0	5.733	A
A-B	116.30	116.30	29.07	0.00			116.30				
A-C	43.15	43.15	10.79	0.00			43.15				
D-AB	110.84	110.84	27.71	0.00	439.78	0.252	109.49	0.0	0.3	11.058	B
D-BC	123.29	123.29	30.82	0.00	370.15	0.333	121.30	0.0	0.5	14.695	B
C-ABD	317.45	317.45	79.36	0.00	648.52	0.490	313.17	0.0	1.1	10.706	B
C-D	23.48	23.48	5.87	0.00			23.48				
C-A	39.26	39.26	9.82	0.00			39.26				

Main results: (16:30-16:45)

Stream	Total Demand (PCU/hr)	Junction demand (PCU/hr)	Junction Arrivals (PCU)	Bypass demand (PCU/hr)	Capacity (PCU/hr)	RFC	Throughput (PCU/hr)	Start queue (PCU)	End queue (PCU)	Delay (s)	LOS
B-ACD	475.56	475.56	118.89	0.00	431.68	1.102	418.62	4.8	19.0	125.847	F
A-BCD	24.20	24.20	6.05	0.00	645.83	0.037	24.14	0.0	0.1	5.790	A
A-B	137.75	137.75	34.44	0.00			137.75				
A-C	51.11	51.11	12.78	0.00			51.11				
D-AB	137.63	137.63	34.41	0.00	388.46	0.354	136.80	0.3	0.5	14.521	B
D-BC	141.95	141.95	35.49	0.00	328.96	0.432	140.95	0.5	0.8	19.504	C
C-ABD	396.47	396.47	99.12	0.00	657.64	0.603	393.98	1.1	1.7	13.696	B
C-D	21.52	21.52	5.38	0.00			21.52				
C-A	35.99	35.99	9.00	0.00			35.99				

Main results: (16:45-17:00)

Stream	Total Demand (PCU/hr)	Junction demand (PCU/hr)	Junction Arrivals (PCU)	Bypass demand (PCU/hr)	Capacity (PCU/hr)	RFC	Throughput (PCU/hr)	Start queue (PCU)	End queue (PCU)	Delay (s)	LOS
B-ACD	582.44	582.44	145.61	0.00	392.98	1.482	392.18	19.0	66.6	411.481	F
A-BCD	32.54	32.54	8.13	0.00	646.66	0.050	32.44	0.1	0.1	5.861	A
A-B	166.59	166.59	41.65	0.00			166.59				
A-C	61.82	61.82	15.45	0.00			61.82				
D-AB	181.55	181.55	45.39	0.00	301.77	0.602	178.03	0.5	1.4	28.860	D
D-BC	160.87	160.87	40.22	0.00	250.58	0.642	157.27	0.8	1.6	38.094	E
C-ABD	515.91	515.91	128.98	0.00	670.38	0.770	508.51	1.7	3.5	21.897	C
C-D	15.01	15.01	3.75	0.00			15.01				
C-A	25.09	25.09	6.27	0.00			25.09				

Main results: (17:00-17:15)

Stream	Total Demand (PCU/hr)	Junction demand (PCU/hr)	Junction Arrivals (PCU)	Bypass demand (PCU/hr)	Capacity (PCU/hr)	RFC	Throughput (PCU/hr)	Start queue (PCU)	End queue (PCU)	Delay (s)	LOS
B-ACD	582.44	582.44	145.61	0.00	390.36	1.492	390.21	66.6	114.6	812.132	F
A-BCD	32.63	32.63	8.16	0.00	644.59	0.051	32.62	0.1	0.1	5.886	A
A-B	166.52	166.52	41.63	0.00			166.52				
A-C	61.79	61.79	15.45	0.00			61.79				
D-AB	190.56	190.56	47.64	0.00	276.24	0.690	188.17	1.4	2.0	40.350	E
D-BC	151.85	151.85	37.96	0.00	211.47	0.718	149.51	1.6	2.2	56.782	F
C-ABD	517.96	517.96	129.49	0.00	671.96	0.771	517.16	3.5	3.7	23.675	C
C-D	14.24	14.24	3.56	0.00			14.24				
C-A	23.81	23.81	5.95	0.00			23.81				

Main results: (17:15-17:30)

Stream	Total Demand (PCU/hr)	Junction demand (PCU/hr)	Junction Arrivals (PCU)	Bypass demand (PCU/hr)	Capacity (PCU/hr)	RFC	Throughput (PCU/hr)	Start queue (PCU)	End queue (PCU)	Delay (s)	LOS
B-ACD	475.56	475.56	118.89	0.00	427.94	1.111	427.69	114.6	126.6	1018.822	F
A-BCD	24.28	24.28	6.07	0.00	642.75	0.038	24.38	0.1	0.1	5.825	A
A-B	137.68	137.68	34.42	0.00			137.68				
A-C	51.09	51.09	12.77	0.00			51.09				
D-AB	148.53	148.53	37.13	0.00	355.02	0.418	153.60	2.0	0.8	18.632	C
D-BC	131.05	131.05	32.76	0.00	258.87	0.506	135.54	2.2	1.1	30.856	D
C-ABD	398.77	398.77	99.69	0.00	659.87	0.604	406.34	3.7	1.9	14.792	B
C-D	20.66	20.66	5.17	0.00			20.66				
C-A	34.55	34.55	8.64	0.00			34.55				

Main results: (17:30-17:45)

Stream	Total Demand (PCU/hr)	Junction demand (PCU/hr)	Junction Arrivals (PCU)	Bypass demand (PCU/hr)	Capacity (PCU/hr)	RFC	Throughput (PCU/hr)	Start queue (PCU)	End queue (PCU)	Delay (s)	LOS
B-ACD	398.26	398.26	99.56	0.00	456.23	0.873	452.65	126.6	113.0	953.532	F
A-BCD	19.05	19.05	4.76	0.00	644.53	0.030	19.10	0.1	0.0	5.758	A
A-B	116.24	116.24	29.06	0.00			116.24				
A-C	43.13	43.13	10.78	0.00			43.13				
D-AB	117.25	117.25	29.31	0.00	419.92	0.279	118.67	0.8	0.4	12.229	B
D-BC	116.89	116.89	29.22	0.00	303.80	0.385	118.70	1.1	0.7	20.101	C
C-ABD	318.85	318.85	79.71	0.00	649.62	0.491	321.73	1.9	1.1	11.180	B
C-D	22.96	22.96	5.74	0.00			22.96				
C-A	38.39	38.39	9.60	0.00			38.39				

Junctions 9

PICADY 9 - Priority Intersection Module

Version: 9.0.0.4211 []
© Copyright TRL Limited, 2015

For sales and distribution information, program advice and maintenance, contact TRL:
Tel: +44 (0)1344 770758 email: software@trl.co.uk Web: http://www.trlsoftware.co.uk

The users of this computer program for the solution of an engineering problem are in no way relieved of their responsibility for the correctness of the solution

Filename: J5 Ashford Road Old Ashford Road.j9
Path: P:\Southampton\ITW\Projects\347826 - Maidstone BC Jct Assessment\AD. Lenham\PICADY models for Addendum\J5 Ashford Road Old Ashford Road
Report generation date: 06/08/2015 09:10:47

»J5 Ashford Road/Old Ashford Road - Base 2031 + Dev, AM
»J5 Ashford Road/Old Ashford Road - Base 2031 + Dev, PM

Summary of junction performance

	AM				PM			
	Queue (PCU)	Delay (s)	RFC	LOS	Queue (PCU)	Delay (s)	RFC	LOS
	J5 Ashford Road/Old Ashford Road - Base 2031 + Dev							
Stream B-AC	28.3	360.25	1.21	F	9.7	133.37	0.97	F
Stream C-AB	0.0	4.37	0.01	A	0.0	4.06	0.01	A
Stream C-A								
Stream A-B								
Stream A-C								

Values shown are the highest values encountered over all time segments. Delay is the maximum value of average delay per arriving vehicle.

File summary

File Description

Title	(untitled)
Location	
Site number	
Date	30/06/2015
Version	
Status	(new file)
Identifier	
Client	
Jobnumber	
Enumerator	MOTTMAC"rap67683
Description	

Units

Distance units	Speed units	Traffic units input	Traffic units results	Flow units	Average delay units	Total delay units	Rate of delay units
m	kph	PCU	PCU	perHour	s	-Min	perMin

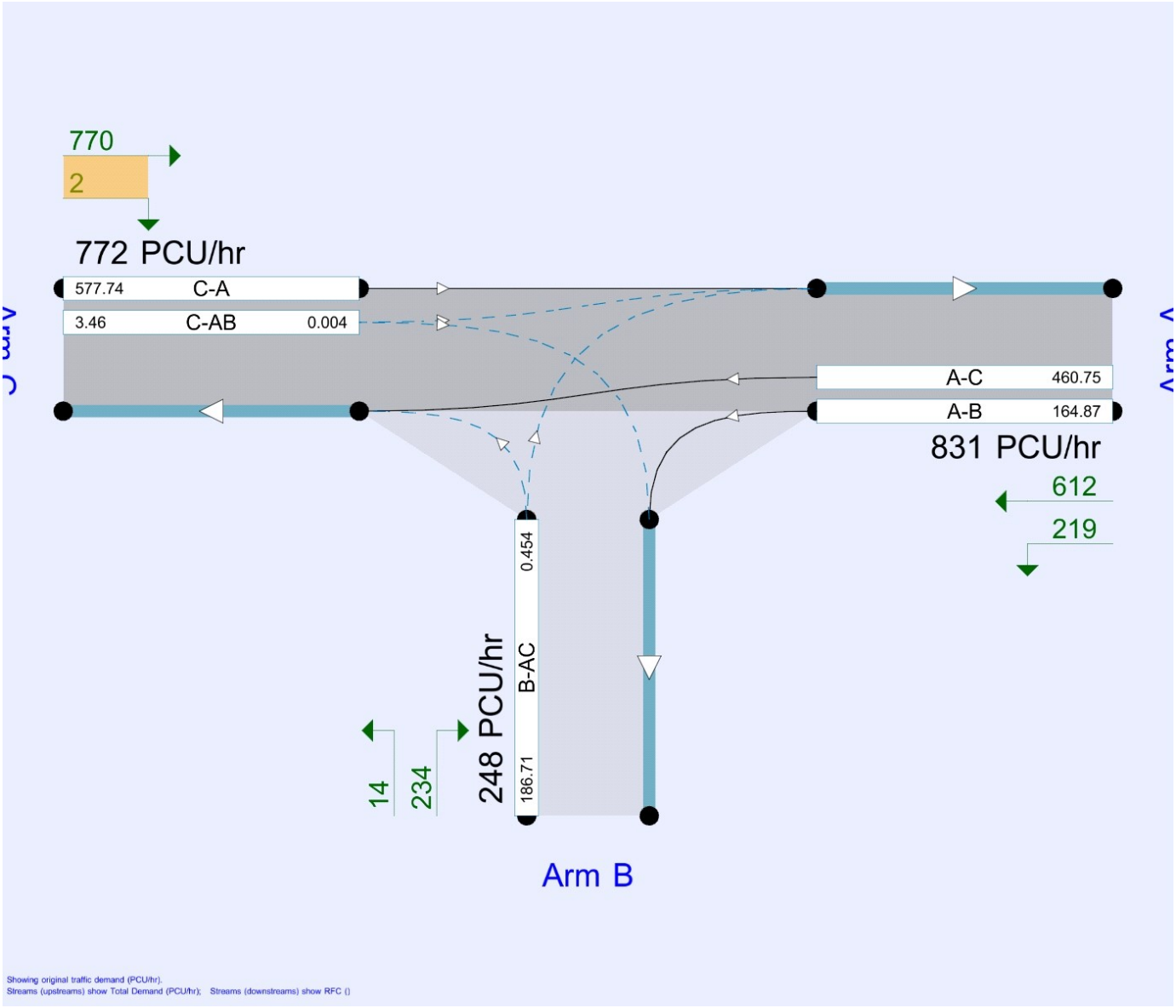

The junction diagram reflects the last run of Junctions.

Analysis Options

Vehicle length (m)	Calculate Queue Percentiles	Calculate detailed queueing delay	Calculate residual capacity	RFC Threshold	Average Delay threshold (s)	Queue threshold (PCU)
5.75				0.85	36.00	20.00

Demand Set Summary

Scenario name	Time Period name	Traffic profile type	Model start time (HH:mm)	Model finish time (HH:mm)	Time segment length (min)	Run automatically
Base 2031 + Dev	AM	ONE HOUR	07:15	08:45	15	✓
Base 2031 + Dev	PM	ONE HOUR	16:30	18:00	15	✓

J5 Ashford Road/Old Ashford Road - Base 2031 + Dev, AM

Data Errors and Warnings

No errors or warnings

Analysis Set Details

ID	Name	Include in report	Network flow scaling factor (%)	Network capacity scaling factor (%)
A1	J5 Ashford Road/Old Ashford Road	✓	100.000	100.000

Junction Network

Junctions

Junction	Name	Junction Type	Major road direction	Junction Delay (s)	Junction LOS
1	untitled	T-Junction	Two-way	44.41	E

Junction Network Options

Driving side	Lighting
Left	Normal/unknown

Arms

Arms

Arm	Name	Description	Arm type
A	Ashford Road E		Major
B	Old Ashford Road S		Minor
C	Ashford Road W		Major

Major Arm Geometry

Arm	Width of carriageway (m)	Has kerbed central reserve	Has right turn bay	Visibility for right turn (m)	Blocks?	Blocking queue (PCU)
C	6.00			190.0	✓	0.00

Geometries for Arm C are measured opposite Arm B. Geometries for Arm A (if relevant) are measured opposite Arm D.

Minor Arm Geometry

Arm	Minor arm type	Lane width (m)	Visibility to left (m)	Visibility to right (m)
B	One lane	4.34	145	150

Slope / Intercept / Capacity

Priority Intersection Slopes and Intercepts

Junction	Stream	Intercept (PCU/hr)	Slope for A-B	Slope for A-C	Slope for C-A	Slope for C-B
1	B-A	683.637	0.125	0.315	0.198	0.450
1	B-C	814.740	0.125	0.316	-	-
1	C-B	683.994	0.265	0.265	-	-

The slopes and intercepts shown above do NOT include any corrections or adjustments.

Streams may be combined, in which case capacity will be adjusted.

Values are shown for the first time segment only; they may differ for subsequent time segments.

Traffic Demand

Demand Set Details

ID	Scenario name	Time Period name	Traffic profile type	Model start time (HH:mm)	Model finish time (HH:mm)	Time segment length (min)	Run automatically
D5	Base 2031 + Dev	AM	ONE HOUR	07:15	08:45	15	✓

Vehicle mix varies over turn	Vehicle mix varies over entry	Vehicle mix source	PCU Factor for a HV (PCU)
✓	✓	HV Percentages	2.00

Demand overview (Traffic)

Arm	Linked arm	Profile type	Use O-D data	Average Demand (PCU/hr)	Scaling Factor (%)
A		ONE HOUR	✓	1013.00	100.000
B		ONE HOUR	✓	245.00	100.000
C		ONE HOUR	✓	730.00	100.000

Origin-Destination Data

Demand (PCU/hr)

		To		
		A	B	C
From	A	0.000	202.000	811.000
	B	230.000	0.000	15.000
	C	728.000	2.000	0.000

Proportions

		To		
		A	B	C
From	A	0.00	0.20	0.80
	B	0.94	0.00	0.06
	C	1.00	0.00	0.00

Vehicle Mix

Heavy Vehicle proportion

		To		
		A	B	C
From	A	0	3	7
	B	3	0	0
	C	6	0	0

Average PCU Per Veh

		To		
		A	B	C
From	A	1.000	1.030	1.070
	B	1.030	1.000	1.000
	C	1.060	1.000	1.000

Detailed Demand Data

Demand for each time segment

Time Segment	Arm	Demand (PCU/hr)	Demand in PCU (PCU/hr)
07:15-07:30	A	762.64	762.64
	B	184.45	184.45
	C	549.58	549.58
07:30-07:45	A	910.67	910.67
	B	220.25	220.25
	C	656.26	656.26
07:45-08:00	A	1115.33	1115.33
	B	269.75	269.75
	C	803.74	803.74
08:00-08:15	A	1115.33	1115.33
	B	269.75	269.75
	C	803.74	803.74
08:15-08:30	A	910.67	910.67
	B	220.25	220.25
	C	656.26	656.26
08:30-08:45	A	762.64	762.64
	B	184.45	184.45
	C	549.58	549.58

Results

Results Summary for whole modelled period

Stream	Max RFC	Max delay (s)	Max Queue (PCU)	Max LOS	Average Demand (PCU/hr)	Total Junction Arrivals (PCU)
B-AC	1.21	360.25	28.3	F	224.82	337.22
C-AB	0.01	4.37	0.0	A	5.40	8.10
C-A					664.46	996.69
A-B					185.36	278.04
A-C					744.19	1116.28

Main Results for each time segment

Main results: (07:15-07:30)

Stream	Total Demand (PCU/hr)	Junction demand (PCU/hr)	Junction Arrivals (PCU)	Bypass demand (PCU/hr)	Capacity (PCU/hr)	RFC	Throughput (PCU/hr)	Start queue (PCU)	End queue (PCU)	Delay (s)	LOS
B-AC	184.45	184.45	46.11	0.00	372.41	0.495	180.58	0.0	1.0	18.941	C
C-AB	3.49	3.49	0.87	0.00	856.60	0.004	3.47	0.0	0.0	4.359	A
C-A	546.09	546.09	136.52	0.00			546.09				
A-B	152.08	152.08	38.02	0.00			152.08				
A-C	610.56	610.56	152.64	0.00			610.56				

Main results: (07:30-07:45)

Stream	Total Demand (PCU/hr)	Junction demand (PCU/hr)	Junction Arrivals (PCU)	Bypass demand (PCU/hr)	Capacity (PCU/hr)	RFC	Throughput (PCU/hr)	Start queue (PCU)	End queue (PCU)	Delay (s)	LOS
B-AC	220.25	220.25	55.06	0.00	309.98	0.711	215.24	1.0	2.2	37.232	E
C-AB	4.96	4.96	1.24	0.00	892.56	0.006	4.95	0.0	0.0	4.200	A
C-A	651.30	651.30	162.82	0.00			651.30				
A-B	181.59	181.59	45.40	0.00			181.59				
A-C	729.07	729.07	182.27	0.00			729.07				

Main results: (07:45-08:00)

Stream	Total Demand (PCU/hr)	Junction demand (PCU/hr)	Junction Arrivals (PCU)	Bypass demand (PCU/hr)	Capacity (PCU/hr)	RFC	Throughput (PCU/hr)	Start queue (PCU)	End queue (PCU)	Delay (s)	LOS
B-AC	269.75	269.75	67.44	0.00	223.05	1.209	214.03	2.2	16.1	186.630	F
C-AB	7.73	7.73	1.93	0.00	941.17	0.008	7.72	0.0	0.0	4.011	A
C-A	796.01	796.01	199.00	0.00			796.01				
A-B	222.41	222.41	55.60	0.00			222.41				
A-C	892.93	892.93	223.23	0.00			892.93				

Main results: (08:00-08:15)

Stream	Total Demand (PCU/hr)	Junction demand (PCU/hr)	Junction Arrivals (PCU)	Bypass demand (PCU/hr)	Capacity (PCU/hr)	RFC	Throughput (PCU/hr)	Start queue (PCU)	End queue (PCU)	Delay (s)	LOS
B-AC	269.75	269.75	67.44	0.00	223.05	1.209	221.18	16.1	28.3	360.252	F
C-AB	7.74	7.74	1.93	0.00	941.17	0.008	7.74	0.0	0.0	4.020	A
C-A	796.01	796.01	199.00	0.00			796.01				
A-B	222.41	222.41	55.60	0.00			222.41				
A-C	892.93	892.93	223.23	0.00			892.93				

Main results: (08:15-08:30)

Stream	Total Demand (PCU/hr)	Junction demand (PCU/hr)	Junction Arrivals (PCU)	Bypass demand (PCU/hr)	Capacity (PCU/hr)	RFC	Throughput (PCU/hr)	Start queue (PCU)	End queue (PCU)	Delay (s)	LOS
B-AC	220.25	220.25	55.06	0.00	309.97	0.711	299.10	28.3	8.6	231.512	F
C-AB	4.96	4.96	1.24	0.00	892.57	0.006	4.97	0.0	0.0	4.220	A
C-A	651.29	651.29	162.82	0.00			651.29				
A-B	181.59	181.59	45.40	0.00			181.59				
A-C	729.07	729.07	182.27	0.00			729.07				

Main results: (08:30-08:45)

Stream	Total Demand (PCU/hr)	Junction demand (PCU/hr)	Junction Arrivals (PCU)	Bypass demand (PCU/hr)	Capacity (PCU/hr)	RFC	Throughput (PCU/hr)	Start queue (PCU)	End queue (PCU)	Delay (s)	LOS
B-AC	184.45	184.45	46.11	0.00	372.40	0.495	214.53	8.6	1.1	27.628	D
C-AB	3.50	3.50	0.88	0.00	856.61	0.004	3.51	0.0	0.0	4.370	A
C-A	546.08	546.08	136.52	0.00			546.08				
A-B	152.08	152.08	38.02	0.00			152.08				
A-C	610.56	610.56	152.64	0.00			610.56				

J5 Ashford Road/Old Ashford Road - Base 2031 + Dev, PM

Data Errors and Warnings

No errors or warnings

Analysis Set Details

ID	Name	Include in report	Network flow scaling factor (%)	Network capacity scaling factor (%)
A1	J5 Ashford Road/Old Ashford Road	✓	100.000	100.000

Junction Network

Junctions

Junction	Name	Junction Type	Major road direction	Junction Delay (s)	Junction LOS
1	untitled	T-Junction	Two-way	17.88	C

Junction Network Options

[same as above]

Arms

Arms

[same as above]

Major Arm Geometry

[same as above]

Minor Arm Geometry

[same as above]

Slope / Intercept / Capacity

[same as above]

Traffic Demand

Demand Set Details

ID	Scenario name	Time Period name	Traffic profile type	Model start time (HH:mm)	Model finish time (HH:mm)	Time segment length (min)	Run automatically
D6	Base 2031 + Dev	PM	ONE HOUR	16:30	18:00	15	✓

Vehicle mix varies over turn	Vehicle mix varies over entry	Vehicle mix source	PCU Factor for a HV (PCU)
✓	✓	HV Percentages	2.00

Demand overview (Traffic)

Arm	Linked arm	Profile type	Use O-D data	Average Demand (PCU/hr)	Scaling Factor (%)
A		ONE HOUR	✓	831.00	100.000
B		ONE HOUR	✓	248.00	100.000
C		ONE HOUR	✓	772.00	100.000

Origin-Destination Data

Demand (PCU/hr)

		To		
		A	B	C
From	A	0.000	219.000	612.000
	B	234.000	0.000	14.000
	C	770.000	2.000	0.000

Proportions

		To		
		A	B	C
From	A	0.00	0.26	0.74
	B	0.94	0.00	0.06
	C	1.00	0.00	0.00

Vehicle Mix

Heavy Vehicle proportion

		To		
		A	B	C
From	A	0	0	4
	B	2	0	0
	C	2	0	0

Average PCU Per Veh

		To		
		A	B	C
From	A	1.000	1.000	1.040
	B	1.022	1.000	1.000
	C	1.022	1.000	1.000

Detailed Demand Data

Demand for each time segment

Time Segment	Arm	Demand (PCU/hr)	Demand in PCU (PCU/hr)
16:30-16:45	A	625.62	625.62
	B	186.71	186.71
	C	581.20	581.20
16:45-17:00	A	747.05	747.05
	B	222.95	222.95
	C	694.01	694.01
17:00-17:15	A	914.95	914.95
	B	273.05	273.05
	C	849.99	849.99
17:15-17:30	A	914.95	914.95
	B	273.05	273.05
	C	849.99	849.99
17:30-17:45	A	747.05	747.05
	B	222.95	222.95
	C	694.01	694.01
17:45-18:00	A	625.62	625.62
	B	186.71	186.71
	C	581.20	581.20

Results

Results Summary for whole modelled period

Stream	Max RFC	Max delay (s)	Max Queue (PCU)	Max LOS	Average Demand (PCU/hr)	Total Junction Arrivals (PCU)
B-AC	0.97	133.37	9.7	F	227.57	341.35
C-AB	0.01	4.06	0.0	A	5.22	7.82
C-A					703.19	1054.78
A-B					200.96	301.44
A-C					561.58	842.37

Main Results for each time segment

Main results: (16:30-16:45)

Stream	Total Demand (PCU/hr)	Junction demand (PCU/hr)	Junction Arrivals (PCU)	Bypass demand (PCU/hr)	Capacity (PCU/hr)	RFC	Throughput (PCU/hr)	Start queue (PCU)	End queue (PCU)	Delay (s)	LOS
B-AC	186.71	186.71	46.68	0.00	411.45	0.454	183.42	0.0	0.8	15.899	C
C-AB	3.46	3.46	0.87	0.00	900.98	0.004	3.44	0.0	0.0	4.060	A
C-A	577.74	577.74	144.44	0.00			577.74				
A-B	164.87	164.87	41.22	0.00			164.87				
A-C	460.75	460.75	115.19	0.00			460.75				

Main results: (16:45-17:00)

Stream	Total Demand (PCU/hr)	Junction demand (PCU/hr)	Junction Arrivals (PCU)	Bypass demand (PCU/hr)	Capacity (PCU/hr)	RFC	Throughput (PCU/hr)	Start queue (PCU)	End queue (PCU)	Delay (s)	LOS
B-AC	222.95	222.95	55.74	0.00	356.87	0.625	219.90	0.8	1.6	26.248	D
C-AB	4.84	4.84	1.21	0.00	942.57	0.005	4.83	0.0	0.0	3.889	A
C-A	689.17	689.17	172.29	0.00			689.17				
A-B	196.88	196.88	49.22	0.00			196.88				
A-C	550.18	550.18	137.54	0.00			550.18				

Main results: (17:00-17:15)

Stream	Total Demand (PCU/hr)	Junction demand (PCU/hr)	Junction Arrivals (PCU)	Bypass demand (PCU/hr)	Capacity (PCU/hr)	RFC	Throughput (PCU/hr)	Start queue (PCU)	End queue (PCU)	Delay (s)	LOS
B-AC	273.05	273.05	68.26	0.00	280.99	0.972	250.66	1.6	7.2	87.726	F
C-AB	7.34	7.34	1.83	0.00	997.51	0.007	7.33	0.0	0.0	3.688	A
C-A	842.65	842.65	210.66	0.00			842.65				
A-B	241.12	241.12	60.28	0.00			241.12				
A-C	673.82	673.82	168.46	0.00			673.82				

Main results: (17:15-17:30)

Stream	Total Demand (PCU/hr)	Junction demand (PCU/hr)	Junction Arrivals (PCU)	Bypass demand (PCU/hr)	Capacity (PCU/hr)	RFC	Throughput (PCU/hr)	Start queue (PCU)	End queue (PCU)	Delay (s)	LOS
B-AC	273.05	273.05	68.26	0.00	280.98	0.972	262.97	7.2	9.7	133.371	F
C-AB	7.34	7.34	1.84	0.00	997.52	0.007	7.34	0.0	0.0	3.693	A
C-A	842.65	842.65	210.66	0.00			842.65				
A-B	241.12	241.12	60.28	0.00			241.12				
A-C	673.82	673.82	168.46	0.00			673.82				

Main results: (17:30-17:45)

Stream	Total Demand (PCU/hr)	Junction demand (PCU/hr)	Junction Arrivals (PCU)	Bypass demand (PCU/hr)	Capacity (PCU/hr)	RFC	Throughput (PCU/hr)	Start queue (PCU)	End queue (PCU)	Delay (s)	LOS
B-AC	222.95	222.95	55.74	0.00	356.86	0.625	254.32	9.7	1.9	44.176	E
C-AB	4.84	4.84	1.21	0.00	942.57	0.005	4.85	0.0	0.0	3.895	A
C-A	689.17	689.17	172.29	0.00			689.17				
A-B	196.88	196.88	49.22	0.00			196.88				
A-C	550.18	550.18	137.54	0.00			550.18				

Main results: (17:45-18:00)

Stream	Total Demand (PCU/hr)	Junction demand (PCU/hr)	Junction Arrivals (PCU)	Bypass demand (PCU/hr)	Capacity (PCU/hr)	RFC	Throughput (PCU/hr)	Start queue (PCU)	End queue (PCU)	Delay (s)	LOS
B-AC	186.71	186.71	46.68	0.00	411.45	0.454	190.64	1.9	0.9	16.920	C
C-AB	3.47	3.47	0.87	0.00	900.98	0.004	3.48	0.0	0.0	4.063	A
C-A	577.73	577.73	144.43	0.00			577.73				
A-B	164.87	164.87	41.22	0.00			164.87				
A-C	460.75	460.75	115.19	0.00			460.75				

Junctions 9

PICADY 9 - Priority Intersection Module

Version: 9.0.0.4211 []
© Copyright TRL Limited, 2015

For sales and distribution information, program advice and maintenance, contact TRL:
Tel: +44 (0)1344 770758 email: software@trl.co.uk Web: http://www.trlsoftware.co.uk

The users of this computer program for the solution of an engineering problem are in no way relieved of their responsibility for the correctness of the solution

Filename: J6 Ashford Road Faversham Road.j9
Path: P:\Southampton\ITW\Projects\347826 - Maidstone BC Jct Assessment\AD. Lenham\PICADY models for Addendum\J6 Ashford Road Faversham Road
Report generation date: 06/08/2015 09:29:52

»J6 Ashford Road/Faversham Road - Base 2031 + Dev, AM
»J6 Ashford Road/Faversham Road - Base 2031 + Dev, PM

Summary of junction performance

	AM				PM			
	Queue (PCU)	Delay (s)	RFC	LOS	Queue (PCU)	Delay (s)	RFC	LOS
	J6 Ashford Road/Faversham Road - Base 2031 + Dev							
Stream B-CD	1.8	29.22	0.65	D	1.0	21.69	0.50	C
Stream B-AD	1.2	62.82	0.56	F	0.8	39.15	0.45	E
Stream A-BCD	0.1	8.61	0.08	A	0.2	10.11	0.13	B
Stream A-B								
Stream A-C								
Stream D-AB	2.0	66.13	0.70	F	0.2	15.04	0.15	C
Stream D-BC	2.8	128.00	0.79	F	0.5	42.21	0.32	E
Stream C-ABD	0.2	9.84	0.16	A	0.5	9.56	0.32	A
Stream C-D								
Stream C-A								

Values shown are the highest values encountered over all time segments. Delay is the maximum value of average delay per arriving vehicle.

File summary

File Description

Title	(untitled)
Location	
Site number	
Date	30/06/2015
Version	
Status	(new file)
Identifier	
Client	
Jobnumber	
Enumerator	MOTTMAC"rap67683
Description	

Units

Distance units	Speed units	Traffic units input	Traffic units results	Flow units	Average delay units	Total delay units	Rate of delay units
m	kph	PCU	PCU	perHour	s	-Min	perMin

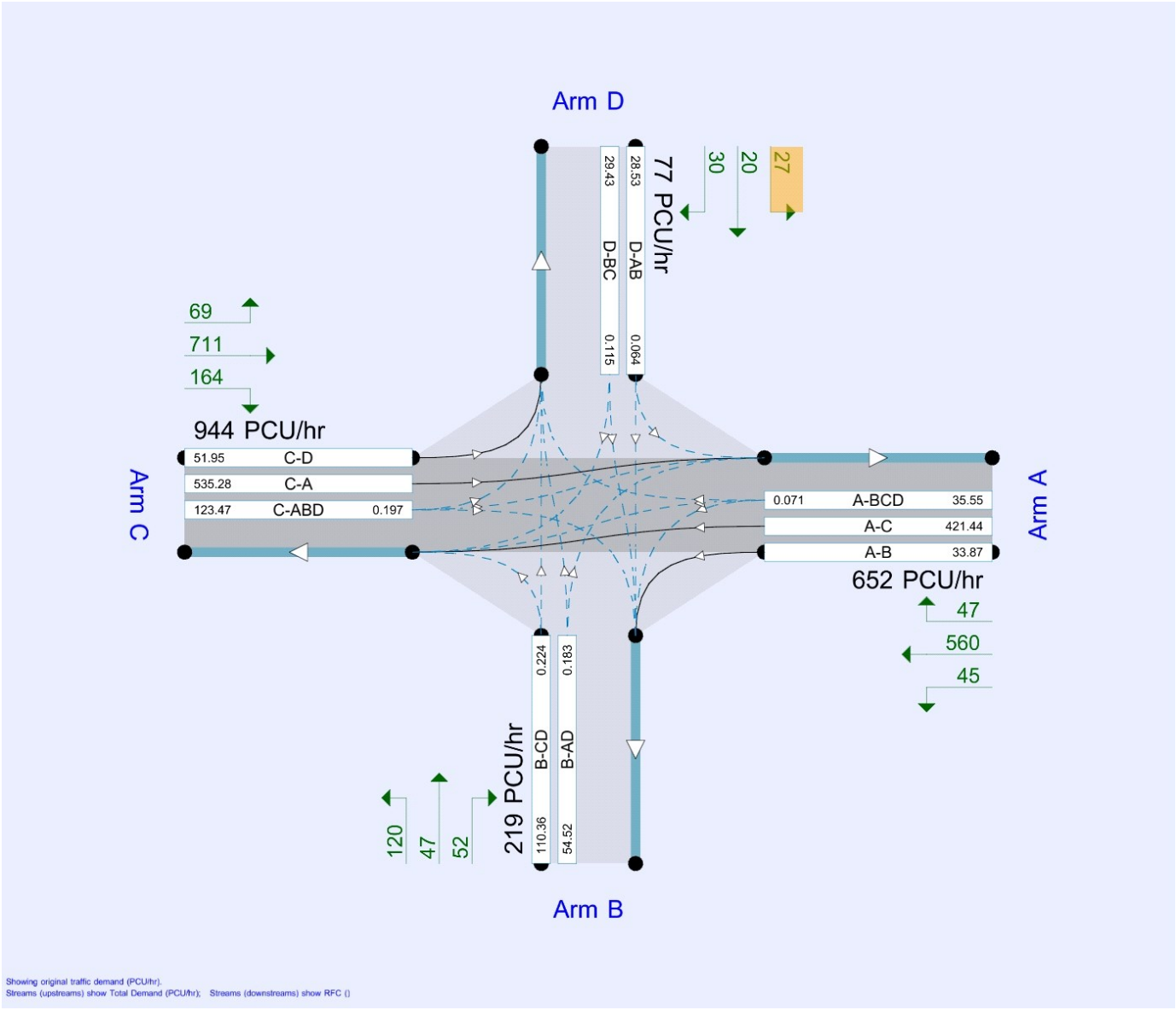

The junction diagram reflects the last run of Junctions.

Analysis Options

Vehicle length (m)	Calculate Queue Percentiles	Calculate detailed queueing delay	Calculate residual capacity	RFC Threshold	Average Delay threshold (s)	Queue threshold (PCU)
5.75				0.85	36.00	20.00

Demand Set Summary

Scenario name	Time Period name	Traffic profile type	Model start time (HH:mm)	Model finish time (HH:mm)	Time segment length (min)	Run automatically
Base 2031 + Dev	AM	ONE HOUR	07:15	08:45	15	✓
Base 2031 + Dev	PM	ONE HOUR	16:30	18:00	15	✓

J6 Ashford Road/Faversham Road - Base 2031 + Dev, AM

Data Errors and Warnings

No errors or warnings

Analysis Set Details

ID	Name	Include in report	Network flow scaling factor (%)	Network capacity scaling factor (%)
A1	J6 Ashford Road/Faversham Road	✓	100.000	100.000

Junction Network

Junctions

Junction	Name	Junction Type	Major road direction	Junction Delay (s)	Junction LOS
1	untitled	Crossroads	Two-way	14.29	B

Junction Network Options

Driving side	Lighting
Left	Normal/unknown

Arms

Arms

Arm	Name	Description	Arm type
A	Ashford Road East		Major
B	Faversham Road S		Minor
C	Ashford Road West		Major
D	Faversham Road N		Minor

Major Arm Geometry

Arm	Width of carriageway (m)	Has kerbed central reserve	Has right turn bay	Width for right turn (m)	Visibility for right turn (m)	Blocks?	Blocking queue (PCU)
A	6.00		✓	2.75	155.0	✓	2.00
C	6.00		✓	3.00	250.0	✓	8.00

Geometries for Arm C are measured opposite Arm B. Geometries for Arm A (if relevant) are measured opposite Arm D.

Minor Arm Geometry

Arm	Minor arm type	Width at give-way (m)	Width at 5m (m)	Width at 10m (m)	Width at 15m (m)	Width at 20m (m)	Estimate flare length	Flare length (PCU)	Visibility to left (m)	Visibility to right (m)
B	One lane plus flare	10.00	10.00	6.00	4.00	3.00		2.00	41	27
D	One lane plus flare	9.00	4.00	3.00	3.00	3.00		1.00	28	31

Slope / Intercept / Capacity

Priority Intersection Slopes and Intercepts

Junction	Stream	Intercept (PCU/hr)	Slope for A-B	Slope for A-C	Slope for A-D	Slope for B-A	Slope for B-C	Slope for B-D	Slope for C-A	Slope for C-B	Slope for C-D	Slope for D-A	Slope for D-B	Slope for D-C
1	A-D	703.455	-	-	-	-	-	-	0.273	0.389	0.273	-	-	-
1	B-A	552.244	0.101	0.254	0.254	-	-	-	0.160	0.363	-	0.254	0.254	0.127
1	B-C	719.823	0.110	0.279	-	-	-	-	-	-	-	-	-	-
1	B-D, nearside lane	566.300	0.103	0.261	0.261	-	-	-	0.164	0.372	0.164	-	-	-
1	B-D, offside lane	552.244	0.101	0.254	0.254	-	-	-	0.160	0.363	0.160	-	-	-
1	C-B	781.320	0.303	0.303	0.432	-	-	-	-	-	-	-	-	-
1	D-A	740.083	-	-	-	-	-	-	0.287	-	0.113	-	-	-
1	D-B, nearside lane	577.081	0.167	0.167	0.380	-	-	-	0.266	0.266	0.105	-	-	-
1	D-B, offside lane	526.849	0.153	0.153	0.346	-	-	-	0.243	0.243	0.096	-	-	-
1	D-C	526.849	-	0.153	0.346	0.121	0.243	0.243	0.243	0.243	0.096	-	-	-

The slopes and intercepts shown above do NOT include any corrections or adjustments.

Streams may be combined, in which case capacity will be adjusted.

Values are shown for the first time segment only; they may differ for subsequent time segments.

Traffic Demand

Demand Set Details

ID	Scenario name	Time Period name	Traffic profile type	Model start time (HH:mm)	Model finish time (HH:mm)	Time segment length (min)	Run automatically
D5	Base 2031 + Dev	AM	ONE HOUR	07:15	08:45	15	✓

Vehicle mix varies over turn	Vehicle mix varies over entry	Vehicle mix source	PCU Factor for a HV (PCU)
✓	✓	HV Percentages	2.00

Demand overview (Traffic)

Arm	Linked arm	Profile type	Use O-D data	Average Demand (PCU/hr)	Scaling Factor (%)
A		ONE HOUR	✓	800.00	100.000
B		ONE HOUR	✓	272.00	100.000
C		ONE HOUR	✓	755.00	100.000
D		ONE HOUR	✓	185.00	100.000

Origin-Destination Data

Demand (PCU/hr)

		To			
		A	B	C	D
From	A	0.000	29.000	735.000	36.000
	B	60.000	0.000	188.000	24.000
	C	657.000	74.000	0.000	24.000
	D	67.000	46.000	72.000	0.000

Proportions

		To			
		A	B	C	D
From	A	0.00	0.04	0.92	0.05
	B	0.22	0.00	0.69	0.09
	C	0.87	0.10	0.00	0.03
	D	0.36	0.25	0.39	0.00

Vehicle Mix

Heavy Vehicle proportion

		To			
		A	B	C	D
From	A	0	0	7	4
	B	2	0	0	0
	C	7	17	0	0
	D	0	0	2	0

Average PCU Per Veh

		To			
		A	B	C	D
From	A	1.000	1.000	1.070	1.038
	B	1.020	1.000	1.000	1.000
	C	1.070	1.170	1.000	1.000
	D	1.000	1.000	1.020	1.000

Detailed Demand Data

Demand for each time segment

Time Segment	Arm	Demand (PCU/hr)	Demand in PCU (PCU/hr)
07:15-07:30	A	602.28	602.28
	B	204.78	204.78
	C	568.40	568.40
	D	139.28	139.28
07:30-07:45	A	719.18	719.18
	B	244.52	244.52
	C	678.73	678.73
	D	166.31	166.31
07:45-08:00	A	880.82	880.82
	B	299.48	299.48
	C	831.27	831.27
	D	203.69	203.69
08:00-08:15	A	880.82	880.82
	B	299.48	299.48
	C	831.27	831.27
	D	203.69	203.69
08:15-08:30	A	719.18	719.18
	B	244.52	244.52
	C	678.73	678.73
	D	166.31	166.31
08:30-08:45	A	602.28	602.28
	B	204.78	204.78
	C	568.40	568.40
	D	139.28	139.28

Results

Results Summary for whole modelled period

Stream	Max RFC	Max delay (s)	Max Queue (PCU)	Max LOS	Average Demand (PCU/hr)	Total Junction Arrivals (PCU)
B-CD	0.65	29.22	1.8	D	187.06	280.58
B-AD	0.56	62.82	1.2	F	62.54	93.81
A-BCD	0.08	8.61	0.1	A	33.34	50.01
A-B					26.60	39.90
A-C					674.15	1011.23
D-AB	0.70	66.13	2.0	F	91.96	137.94
D-BC	0.79	128.00	2.8	F	77.80	116.69
C-ABD	0.16	9.84	0.2	A	67.90	101.86
C-D					22.02	33.03
C-A					602.87	904.31

Main Results for each time segment

Main results: (07:15-07:30)

Stream	Total Demand (PCU/hr)	Junction demand (PCU/hr)	Junction Arrivals (PCU)	Bypass demand (PCU/hr)	Capacity (PCU/hr)	RFC	Throughput (PCU/hr)	Start queue (PCU)	End queue (PCU)	Delay (s)	LOS
B-CD	152.06	152.06	38.01	0.00	506.57	0.300	150.37	0.0	0.4	10.060	B
B-AD	52.72	52.72	13.18	0.00	276.44	0.191	51.78	0.0	0.2	16.233	C
A-BCD	27.19	27.19	6.80	0.00	543.82	0.050	26.97	0.0	0.1	7.227	A
A-B	21.83	21.83	5.46	0.00			21.83				
A-C	553.26	553.26	138.32	0.00			553.26				
D-AB	71.46	71.46	17.86	0.00	438.74	0.163	70.69	0.0	0.2	9.761	A
D-BC	67.82	67.82	16.96	0.00	259.24	0.262	66.42	0.0	0.3	18.838	C
C-ABD	55.71	55.71	13.93	0.00	595.48	0.094	55.23	0.0	0.1	7.790	A
C-D	18.07	18.07	4.52	0.00			18.07				
C-A	494.62	494.62	123.66	0.00			494.62				

Main results: (07:30-07:45)

Stream	Total Demand (PCU/hr)	Junction demand (PCU/hr)	Junction Arrivals (PCU)	Bypass demand (PCU/hr)	Capacity (PCU/hr)	RFC	Throughput (PCU/hr)	Start queue (PCU)	End queue (PCU)	Delay (s)	LOS
B-CD	182.48	182.48	45.62	0.00	456.04	0.400	181.56	0.4	0.7	13.071	B
B-AD	62.04	62.04	15.51	0.00	219.64	0.282	61.43	0.2	0.4	23.072	C
A-BCD	32.58	32.58	8.14	0.00	513.86	0.063	32.51	0.1	0.1	7.763	A
A-B	26.06	26.06	6.52	0.00			26.06				
A-C	660.54	660.54	165.14	0.00			660.54				
D-AB	87.72	87.72	21.93	0.00	362.75	0.242	87.24	0.2	0.3	13.042	B
D-BC	78.59	78.59	19.65	0.00	203.11	0.387	77.55	0.3	0.6	28.885	D
C-ABD	66.52	66.52	16.63	0.00	559.31	0.119	66.38	0.1	0.2	8.541	A
C-D	21.58	21.58	5.39	0.00			21.58				
C-A	590.63	590.63	147.66	0.00			590.63				

Main results: (07:45-08:00)

Stream	Total Demand (PCU/hr)	Junction demand (PCU/hr)	Junction Arrivals (PCU)	Bypass demand (PCU/hr)	Capacity (PCU/hr)	RFC	Throughput (PCU/hr)	Start queue (PCU)	End queue (PCU)	Delay (s)	LOS
B-CD	226.33	226.33	56.58	0.00	355.55	0.637	222.45	0.7	1.6	26.317	D
B-AD	73.14	73.14	18.29	0.00	133.50	0.548	70.34	0.4	1.1	55.780	F
A-BCD	40.25	40.25	10.06	0.00	474.33	0.085	40.15	0.1	0.1	8.607	A
A-B	31.91	31.91	7.98	0.00			31.91				
A-C	808.66	808.66	202.16	0.00			808.66				
D-AB	115.41	115.41	28.85	0.00	190.64	0.605	111.20	0.3	1.4	43.327	E
D-BC	88.28	88.28	22.07	0.00	115.60	0.764	81.70	0.6	2.3	94.665	F
C-ABD	81.48	81.48	20.37	0.00	509.41	0.160	81.22	0.2	0.2	9.830	A
C-D	26.42	26.42	6.61	0.00			26.42				
C-A	723.37	723.37	180.84	0.00			723.37				

Main results: (08:00-08:15)

Stream	Total Demand (PCU/hr)	Junction demand (PCU/hr)	Junction Arrivals (PCU)	Bypass demand (PCU/hr)	Capacity (PCU/hr)	RFC	Throughput (PCU/hr)	Start queue (PCU)	End queue (PCU)	Delay (s)	LOS
B-CD	226.66	226.66	56.66	0.00	348.23	0.651	226.10	1.6	1.8	29.222	D
B-AD	72.82	72.82	18.20	0.00	129.87	0.561	72.39	1.1	1.2	62.818	F
A-BCD	40.25	40.25	10.06	0.00	474.29	0.085	40.25	0.1	0.1	8.614	A
A-B	31.91	31.91	7.98	0.00			31.91				
A-C	808.66	808.66	202.16	0.00			808.66				
D-AB	116.83	116.83	29.21	0.00	165.82	0.705	114.30	1.4	2.0	66.130	F
D-BC	86.86	86.86	21.72	0.00	110.31	0.787	84.75	2.3	2.8	127.997	F
C-ABD	81.48	81.48	20.37	0.00	509.37	0.160	81.47	0.2	0.2	9.843	A
C-D	26.42	26.42	6.61	0.00			26.42				
C-A	723.37	723.37	180.84	0.00			723.37				

Main results: (08:15-08:30)

Stream	Total Demand (PCU/hr)	Junction demand (PCU/hr)	Junction Arrivals (PCU)	Bypass demand (PCU/hr)	Capacity (PCU/hr)	RFC	Throughput (PCU/hr)	Start queue (PCU)	End queue (PCU)	Delay (s)	LOS
B-CD	182.69	182.69	45.67	0.00	451.71	0.404	186.96	1.8	0.7	13.804	B
B-AD	61.83	61.83	15.46	0.00	216.04	0.286	64.91	1.2	0.4	24.700	C
A-BCD	32.58	32.58	8.14	0.00	513.80	0.063	32.68	0.1	0.1	7.770	A
A-B	26.06	26.06	6.52	0.00			26.06				
A-C	660.54	660.54	165.14	0.00			660.54				
D-AB	88.73	88.73	22.18	0.00	346.00	0.256	95.31	2.0	0.4	14.719	B
D-BC	77.58	77.58	19.39	0.00	198.90	0.390	85.97	2.8	0.7	34.519	D
C-ABD	66.52	66.52	16.63	0.00	559.24	0.119	66.77	0.2	0.2	8.558	A
C-D	21.58	21.58	5.39	0.00			21.58				
C-A	590.63	590.63	147.66	0.00			590.63				

Main results: (08:30-08:45)

Stream	Total Demand (PCU/hr)	Junction demand (PCU/hr)	Junction Arrivals (PCU)	Bypass demand (PCU/hr)	Capacity (PCU/hr)	RFC	Throughput (PCU/hr)	Start queue (PCU)	End queue (PCU)	Delay (s)	LOS
B-CD	152.11	152.11	38.03	0.00	505.25	0.301	153.14	0.7	0.4	10.255	B
B-AD	52.67	52.67	13.17	0.00	275.42	0.191	53.37	0.4	0.2	16.545	C
A-BCD	27.19	27.19	6.80	0.00	543.60	0.050	27.26	0.1	0.1	7.238	A
A-B	21.83	21.83	5.46	0.00			21.83				
A-C	553.26	553.26	138.32	0.00			553.26				
D-AB	71.63	71.63	17.91	0.00	435.67	0.164	72.24	0.4	0.2	9.921	A
D-BC	67.65	67.65	16.91	0.00	257.95	0.262	68.91	0.7	0.4	19.480	C
C-ABD	55.71	55.71	13.93	0.00	595.35	0.094	55.86	0.2	0.1	7.810	A
C-D	18.07	18.07	4.52	0.00			18.07				
C-A	494.62	494.62	123.66	0.00			494.62				

J6 Ashford Road/Faversham Road - Base 2031 + Dev, PM

Data Errors and Warnings

No errors or warnings

Analysis Set Details

ID	Name	Include in report	Network flow scaling factor (%)	Network capacity scaling factor (%)
A1	J6 Ashford Road/Faversham Road	✓	100.000	100.000

Junction Network

Junctions

Junction	Name	Junction Type	Major road direction	Junction Delay (s)	Junction LOS
1	untitled	Crossroads	Two-way	5.40	A

Junction Network Options

[same as above]

Arms

Arms

[same as above]

Major Arm Geometry

[same as above]

Minor Arm Geometry

[same as above]

Slope / Intercept / Capacity

[same as above]

Traffic Demand

Demand Set Details

ID	Scenario name	Time Period name	Traffic profile type	Model start time (HH:mm)	Model finish time (HH:mm)	Time segment length (min)	Run automatically
D6	Base 2031 + Dev	PM	ONE HOUR	16:30	18:00	15	✓

Vehicle mix varies over turn	Vehicle mix varies over entry	Vehicle mix source	PCU Factor for a HV (PCU)
✓	✓	HV Percentages	2.00

Demand overview (Traffic)

Arm	Linked arm	Profile type	Use O-D data	Average Demand (PCU/hr)	Scaling Factor (%)
A		ONE HOUR	✓	652.00	100.000
B		ONE HOUR	✓	219.00	100.000
C		ONE HOUR	✓	944.00	100.000
D		ONE HOUR	✓	77.00	100.000

Origin-Destination Data

Demand (PCU/hr)

		To			
		A	B	C	D
From	A	0.000	45.000	560.000	47.000
	B	52.000	0.000	120.000	47.000
	C	711.000	164.000	0.000	69.000
	D	27.000	20.000	30.000	0.000

Proportions

		To			
		A	B	C	D
From	A	0.00	0.07	0.86	0.07
	B	0.24	0.00	0.55	0.21
	C	0.75	0.17	0.00	0.07
	D	0.35	0.26	0.39	0.00

Vehicle Mix

Heavy Vehicle proportion

		To			
		A	B	C	D
From	A	0	0	4	0
	B	0	0	0	0
	C	2	0	0	0
	D	0	1	0	0

Average PCU Per Veh

		To			
		A	B	C	D
From	A	1.000	1.000	1.040	1.000
	B	1.000	1.000	1.000	1.000
	C	1.020	1.000	1.000	1.000
	D	1.000	1.010	1.000	1.000

Detailed Demand Data

Demand for each time segment

Time Segment	Arm	Demand (PCU/hr)	Demand in PCU (PCU/hr)
16:30-16:45	A	490.86	490.86
	B	164.87	164.87
	C	710.69	710.69
	D	57.97	57.97
16:45-17:00	A	586.13	586.13
	B	196.88	196.88
	C	848.64	848.64
	D	69.22	69.22
17:00-17:15	A	717.87	717.87
	B	241.12	241.12
	C	1039.36	1039.36
	D	84.78	84.78
17:15-17:30	A	717.87	717.87
	B	241.12	241.12
	C	1039.36	1039.36
	D	84.78	84.78
17:30-17:45	A	586.13	586.13
	B	196.88	196.88
	C	848.64	848.64
	D	69.22	69.22
17:45-18:00	A	490.86	490.86
	B	164.87	164.87
	C	710.69	710.69
	D	57.97	57.97

Results

Results Summary for whole modelled period

Stream	Max RFC	Max delay (s)	Max Queue (PCU)	Max LOS	Average Demand (PCU/hr)	Total Junction Arrivals (PCU)
B-CD	0.50	21.69	1.0	C	136.80	205.19
B-AD	0.45	39.15	0.8	E	64.16	96.24
A-BCD	0.13	10.11	0.2	B	43.82	65.72
A-B					41.24	61.86
A-C					513.23	769.84
D-AB	0.15	15.04	0.2	C	35.65	53.47
D-BC	0.32	42.21	0.5	E	35.01	52.52
C-ABD	0.32	9.56	0.5	A	150.50	225.75
C-D					63.31	94.97
C-A					652.41	978.62

Main Results for each time segment

Main results: (16:30-16:45)

Stream	Total Demand (PCU/hr)	Junction demand (PCU/hr)	Junction Arrivals (PCU)	Bypass demand (PCU/hr)	Capacity (PCU/hr)	RFC	Throughput (PCU/hr)	Start queue (PCU)	End queue (PCU)	Delay (s)	LOS
B-CD	110.36	110.36	27.59	0.00	492.71	0.224	109.22	0.0	0.3	9.362	A
B-AD	54.52	54.52	13.63	0.00	298.41	0.183	53.64	0.0	0.2	14.658	B
A-BCD	35.55	35.55	8.89	0.00	497.65	0.071	35.24	0.0	0.1	7.782	A
A-B	33.87	33.87	8.47	0.00			33.87				
A-C	421.44	421.44	105.36	0.00			421.44				
D-AB	28.53	28.53	7.13	0.00	448.33	0.064	28.27	0.0	0.1	8.589	A
D-BC	29.43	29.43	7.36	0.00	256.55	0.115	28.93	0.0	0.1	15.818	C
C-ABD	123.47	123.47	30.87	0.00	628.14	0.197	122.50	0.0	0.2	7.107	A
C-D	51.95	51.95	12.99	0.00			51.95				
C-A	535.28	535.28	133.82	0.00			535.28				

Main results: (16:45-17:00)

Stream	Total Demand (PCU/hr)	Junction demand (PCU/hr)	Junction Arrivals (PCU)	Bypass demand (PCU/hr)	Capacity (PCU/hr)	RFC	Throughput (PCU/hr)	Start queue (PCU)	End queue (PCU)	Delay (s)	LOS
B-CD	133.09	133.09	33.27	0.00	436.64	0.305	132.50	0.3	0.4	11.814	B
B-AD	63.79	63.79	15.95	0.00	244.80	0.261	63.30	0.2	0.3	19.779	C
A-BCD	42.69	42.69	10.67	0.00	459.21	0.093	42.59	0.1	0.1	8.641	A
A-B	40.42	40.42	10.11	0.00			40.42				
A-C	503.02	503.02	125.76	0.00			503.02				
D-AB	34.52	34.52	8.63	0.00	389.18	0.089	34.40	0.1	0.1	10.173	B
D-BC	34.70	34.70	8.68	0.00	202.64	0.171	34.41	0.1	0.2	21.409	C
C-ABD	147.43	147.43	36.86	0.00	598.28	0.246	147.11	0.2	0.3	7.973	A
C-D	62.03	62.03	15.51	0.00			62.03				
C-A	639.17	639.17	159.79	0.00			639.17				

Main results: (17:00-17:15)

Stream	Total Demand (PCU/hr)	Junction demand (PCU/hr)	Junction Arrivals (PCU)	Bypass demand (PCU/hr)	Capacity (PCU/hr)	RFC	Throughput (PCU/hr)	Start queue (PCU)	End queue (PCU)	Delay (s)	LOS
B-CD	166.72	166.72	41.68	0.00	335.11	0.498	164.65	0.4	0.9	20.871	C
B-AD	74.41	74.41	18.60	0.00	166.72	0.446	72.77	0.3	0.8	37.682	E
A-BCD	53.21	53.21	13.30	0.00	409.69	0.130	53.01	0.1	0.2	10.094	B
A-B	49.44	49.44	12.36	0.00			49.44				
A-C	615.22	615.22	153.81	0.00			615.22				
D-AB	43.79	43.79	10.95	0.00	286.38	0.153	43.47	0.1	0.2	14.846	B
D-BC	40.98	40.98	10.25	0.00	127.11	0.322	40.00	0.2	0.4	40.967	E
C-ABD	180.60	180.60	45.15	0.00	557.22	0.324	180.00	0.3	0.5	9.528	A
C-D	75.97	75.97	18.99	0.00			75.97				
C-A	782.79	782.79	195.70	0.00			782.79				

Main results: (17:15-17:30)

Stream	Total Demand (PCU/hr)	Junction demand (PCU/hr)	Junction Arrivals (PCU)	Bypass demand (PCU/hr)	Capacity (PCU/hr)	RFC	Throughput (PCU/hr)	Start queue (PCU)	End queue (PCU)	Delay (s)	LOS
B-CD	166.94	166.94	41.73	0.00	332.45	0.502	166.80	0.9	1.0	21.692	C
B-AD	74.19	74.19	18.55	0.00	165.74	0.448	74.07	0.8	0.8	39.149	E
A-BCD	53.21	53.21	13.30	0.00	409.58	0.130	53.20	0.2	0.2	10.111	B
A-B	49.44	49.44	12.36	0.00			49.44				
A-C	615.22	615.22	153.80	0.00			615.22				
D-AB	43.89	43.89	10.97	0.00	284.07	0.155	43.88	0.2	0.2	15.036	C
D-BC	40.89	40.89	10.22	0.00	126.10	0.324	40.82	0.4	0.5	42.211	E
C-ABD	180.60	180.60	45.15	0.00	557.14	0.324	180.59	0.5	0.5	9.560	A
C-D	75.97	75.97	18.99	0.00			75.97				
C-A	782.79	782.79	195.70	0.00			782.79				

Main results: (17:30-17:45)

Stream	Total Demand (PCU/hr)	Junction demand (PCU/hr)	Junction Arrivals (PCU)	Bypass demand (PCU/hr)	Capacity (PCU/hr)	RFC	Throughput (PCU/hr)	Start queue (PCU)	End queue (PCU)	Delay (s)	LOS
B-CD	133.25	133.25	33.31	0.00	434.13	0.307	135.37	1.0	0.5	12.131	B
B-AD	63.63	63.63	15.91	0.00	244.05	0.261	65.29	0.8	0.4	20.317	C
A-BCD	42.69	42.69	10.67	0.00	459.05	0.093	42.88	0.2	0.1	8.662	A
A-B	40.42	40.42	10.11	0.00			40.42				
A-C	503.02	503.02	125.76	0.00			503.02				
D-AB	34.58	34.58	8.64	0.00	387.31	0.089	34.90	0.2	0.1	10.258	B
D-BC	34.64	34.64	8.66	0.00	201.35	0.172	35.64	0.5	0.2	21.891	C
C-ABD	147.43	147.43	36.86	0.00	598.15	0.246	148.02	0.5	0.3	8.007	A
C-D	62.03	62.03	15.51	0.00			62.03				
C-A	639.17	639.17	159.79	0.00			639.17				

Main results: (17:45-18:00)

Stream	Total Demand (PCU/hr)	Junction demand (PCU/hr)	Junction Arrivals (PCU)	Bypass demand (PCU/hr)	Capacity (PCU/hr)	RFC	Throughput (PCU/hr)	Start queue (PCU)	End queue (PCU)	Delay (s)	LOS
B-CD	110.43	110.43	27.61	0.00	491.27	0.225	111.06	0.5	0.3	9.483	A
B-AD	54.45	54.45	13.61	0.00	297.68	0.183	54.99	0.4	0.2	14.867	B
A-BCD	35.55	35.55	8.89	0.00	497.20	0.072	35.66	0.1	0.1	7.805	A
A-B	33.87	33.87	8.47	0.00			33.87				
A-C	421.44	421.44	105.36	0.00			421.44				
D-AB	28.56	28.56	7.14	0.00	447.29	0.064	28.68	0.1	0.1	8.627	A
D-BC	29.41	29.41	7.35	0.00	255.52	0.115	29.74	0.2	0.1	16.004	C
C-ABD	123.47	123.47	30.87	0.00	627.95	0.197	123.80	0.3	0.2	7.147	A
C-D	51.95	51.95	12.99	0.00			51.95				
C-A	535.28	535.28	133.82	0.00			535.28				

Main results: (17:15-17:30)

Stream	Total Demand (PCU/hr)	Junction demand (PCU/hr)	Junction Arrivals (PCU)	Bypass demand (PCU/hr)	Capacity (PCU/hr)	RFC	Throughput (PCU/hr)	Start queue (PCU)	End queue (PCU)	Delay (s)	LOS
B-CD	378.75	378.75	94.69	0.00	0.00	9999999999.000	0.00	137.8	232.5	9999999999.000	F
B-AD	120.01	120.01	30.00	0.00	0.00	9999999999.000	0.00	44.7	74.7	9999999999.000	F
A-BCD	1.10	1.10	0.28	0.00	132.41	0.008	1.09	0.0	0.0	27.412	D
A-B	131.02	131.02	32.76	0.00			131.02				
A-C	889.62	889.62	222.41	0.00			889.62				
D-ABC	5.51	5.51	1.38	0.00	0.00	9999999999.000	0.00	2.5	3.9	9999999999.000	F
C-ABD	1714.29	1714.29	428.57	0.00	1488.81	1.151	1482.04	56.3	114.4	263.546	F
C-D	0.00	0.00	0.00	0.00			0.00				
C-A	0.00	0.00	0.00	0.00			0.00				

Main results: (17:30-17:45)

Stream	Total Demand (PCU/hr)	Junction demand (PCU/hr)	Junction Arrivals (PCU)	Bypass demand (PCU/hr)	Capacity (PCU/hr)	RFC	Throughput (PCU/hr)	Start queue (PCU)	End queue (PCU)	Delay (s)	LOS
B-CD	309.25	309.25	77.31	0.00	0.00	9999999999.000	0.00	232.5	309.8	9999999999.000	F
B-AD	97.99	97.99	24.50	0.00	0.00	9999999999.000	0.00	74.7	99.2	9999999999.000	F
A-BCD	0.90	0.90	0.22	0.00	159.29	0.006	0.91	0.0	0.0	22.730	C
A-B	106.98	106.98	26.74	0.00			106.98				
A-C	726.38	726.38	181.59	0.00			726.38				
D-ABC	4.49	4.49	1.12	0.00	0.00	9999999999.000	0.00	3.9	5.0	9999999999.000	F
C-ABD	555.65	555.65	138.91	0.00	637.76	0.871	809.21	114.4	51.0	644.594	F
C-D	0.00	0.00	0.00	0.00			0.00				
C-A	844.07	844.07	211.02	0.00			844.07				

Main results: (17:45-18:00)

Stream	Total Demand (PCU/hr)	Junction demand (PCU/hr)	Junction Arrivals (PCU)	Bypass demand (PCU/hr)	Capacity (PCU/hr)	RFC	Throughput (PCU/hr)	Start queue (PCU)	End queue (PCU)	Delay (s)	LOS
B-CD	258.98	258.98	64.75	0.00	191.38	1.353	191.37	309.8	326.7	9999999999.000	F
B-AD	82.06	82.06	20.52	0.00	61.17	1.342	61.14	99.2	104.4	9999999999.000	F
A-BCD	0.75	0.75	0.19	0.00	305.31	0.002	0.77	0.0	0.0	11.820	B
A-B	89.59	89.59	22.40	0.00			89.59				
A-C	608.30	608.30	152.08	0.00			608.30				
D-ABC	3.76	3.76	0.94	0.00	0.00	9999999999.000	0.00	5.0	6.0	9999999999.000	F
C-ABD	343.72	343.72	85.93	0.00	515.38	0.667	513.50	51.0	8.6	227.924	F
C-D	0.00	0.00	0.00	0.00			0.00				
C-A	828.48	828.48	207.12	0.00			828.48				